TOSUN

TC Series Product Family

Version: V1.0 | English

tosunai.com

Copyright Information

Shanghai TOSUN Technology Ltd

No. 9 Building, 1288 Jiasong North Road, Jiading District, Shanghai (Headquarters)

Buildings 14-17, Lane 4849 Cao'an Highway (Shanghai Research Institute)

In the principle of providing better services to users, Shanghai TOSUN Technology Ltd (hereinafter referred to as "TOSUN Technology") will present as much detailed and accurate product information as possible in this manual. However, due to the timeliness of the content in this manual, TOSUN Technology cannot fully guarantee the timeliness and applicability of this document at any time.

If there are any changes to the information and data in this manual, no separate notice will be given. To obtain the latest version of the information, please visit the official website of TOSUN Technology or contact the staff of TOSUN Technology. Thank you for your understanding and support!

Without the written permission of TOSUN Technology, no part of this manual may be copied in any form or by any means.

@ Copyright 2024, Shanghai TOSUN Technology Ltd. All rights reserved.

What Is the TC Series Product Family?

TOSUN has a wide range of product series, such as the TC series, TP series, TE series, TLog series, TTS series, and so on. Among them, TC series is the largest series with the most hardware types, covering tools for CAN/CANFD communication protocol, LIN communication protocol, FlexRay communication protocol, and Ethernet communication protocol.

What Products Are Included in the TC Series?

TC1001	TC1011	TC1012(P)	TC1013
TC1014	TC1016(P)	TC1017	TC1018
TC1026(P)	TC1034	TC1113B	TC1114B
TC1034 Pro	TC1018 Pro	TC1054	

What Can They Do?

- Bus data collection;
- Domain controller testing;
- Various automated testing systems;
- UDS diagnostics and calibration with CCP and XCP;
- Offline/online replay for blf and asc format files;
- ECU flashing;
- ...

How to Use TC Series Product?

The TC series products, once connected to a PC via USB or WiFi, can be controlled by the powerful TSMaster software on the PC to perform communication between the device and the ECU using CAN/CANFD, LIN, FlexRay, Ethernet protocols, as well as I/O communication.

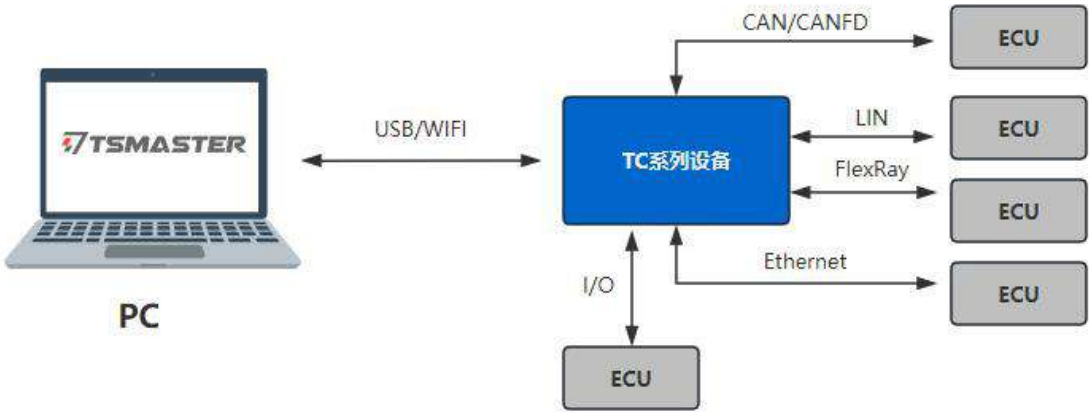

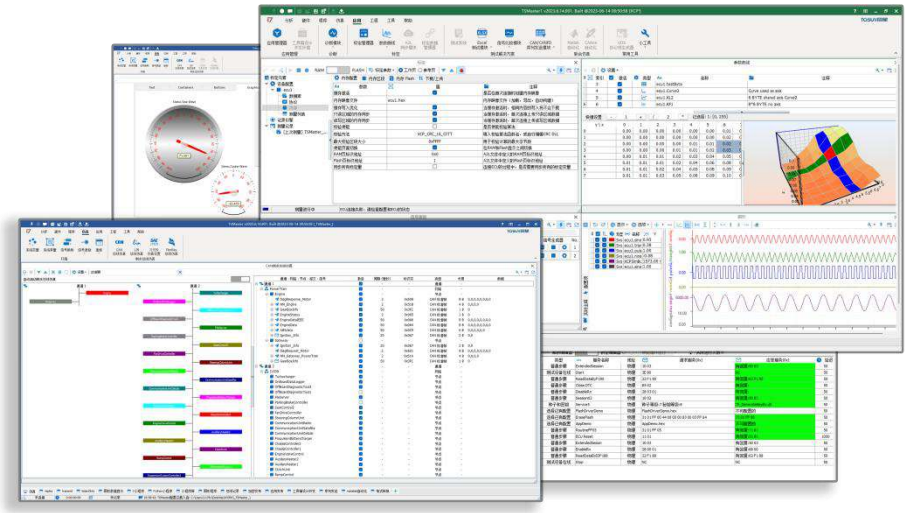

Email: sales@tosunai.com

Contents

1.About this User Manual 10
1.1 Warranty 10
1.2 Copyright 10
2.Product Overview 11
2.1 Portable Bus Products 11
2.2 Multi-channel CANFD/LIN Bus Products 14
2.3 Multi-channel CANFD/FlexRay Bus Product 16
2.4 Multi-channel CANFD to WiFi Product 19
2.5 CAN Surge Protection Device 21
3.General Information 23
3.1 Bus Data Collection and Analysis 23
3.2 Bus Simulation 24
3.3 Diagnostic 25
3.4 Calibration 26
3.5 DoIP Function 28
3.6 Secondary Development 30
4.TC1001 30
4.1 Overview 30
4.2 Features 32
4.3 Technical Data 32
4.4 Electrical Data 33
4.5 Mechanical Data 34
4.6 Scope of Delivery 34
4.7 Hardware Interface 35
4.8 LED 35
4.9 Optional Accessories 36
5.TC1011 37
5.1 Overview 37
5.2 Features 38
5.3 Technical Data 39
5.4 Electrical Data 40
5.5 Mechanical Data 41
5.6 Scope of Delivery 41

5.7 Hardware Interface 43
5.8 LED 43
5.9 Optional Accessories 45
6.TC1012P 45
6.1 Overview 45
6.2 Features 46
6.3 Technical Data 47
6.4 Electrical Data 48
6.5 Mechanical Data 49
6.6 Scope of Delivery 50
6.7 Hardware Interface 51
6.8 LED 52
6.9 Optional Accessories 53
7.TC1013 54
7.1 Overview 54
7.2 Features 55
7.3 Technical Data 56
7.4 Electrical Data 57
7.5 Mechanical Data 58
7.6 Scope of Delivery 59
7.7 Hardware Interface 60
7.8 LED 61
7.9 Optional Accessories 62
8.TC1014 63
8.1 Overview 63
8.2 Features 64
8.3 Technical Data 64
8.4 Electrical Data 65
8.5 Mechanical Data 66
8.6 Scope of Delivery 67
8.7 Hardware Interface 68
8.8 LED 69
8.9 Optional Accessories 70
9.TC1016P 71

9.1 Overview 71
9.2 Features 72
9.3 Technical Data 72
9.4 Electrical Data 73
9.5 Mechanical Data 75
9.6 Scope of Delivery 76
9.7 Hardware Interface 77
9.8 LED 78
9.9 Optional Accessories 79
10.TC1017 80
10.1 Overview 80
10.2 Features 81
10.3 Technical Data 81
10.4 Electrical Data 82
10.5 Mechanical Data 83
10.6 Scope of Delivery 84
10.7 Hardware Interface 85
10.8 LED 86
10.9 Optional Accessories 87
11.TC1018 88
11.1 Overview 88
11.2 Features 89
11.3 Technical Data 89
11.4 Electrical Data 90
11.5 Mechanical Data 91
11.6 Scope of Delivery 92
11.7 Hardware Interface 93
11.8 LED 94
11.9 Optional Accessories 95
12.TC1026P 96
12.1 Overview 96
12.2 Features 97
12.3 Technical Data 97
12.4 Electrical Data 98
12.5 Mechanical Data 100

12.6 Scope of Delivery 101
12.7 Hardware Interface 102
12.8 LED 103
12.9 Optional Accessories 104
13.TC1034 105
13.1 Overview 105
13.2 Features 106
13.3 Main Functions of FlexRay 107
13.4 Technical Data 107
13.5 Electrical Data 108
13.6 Mechanical Data 110
13.7 Scope of Delivery 111
13.8 Hardware Interface 112
13.9 LED 113
13.10 Optional Accessories 114
14.TC1113B 115
14.1 Overview 115
14.2 Features 116
14.3 Technical Data 116
14.4 Electrical Data 117
14.5 Mechanical Data 118
14.6 Scope of Delivery 119
14.7 Hardware Interface 120
14.8 LED 121
14.9 Optional Accessories 122
15.TC1114B 123
15.1 Overview 123
15.2 Features 124
15.3 Technical Data 124
15.4 Electrical Data 125
15.5 Mechanical Data 126
15.6 Scope of Delivery 127
15.7 Hardware Interface 128
15.8 LED 129

15.9 Optional Accessories 130
16.TC1034 Pro 131
17.TC1018 Pro 131
18.TC1054 131
19.Time Synchronization Box 131
20. Quick Start 132
20.1 System Connection 132
20.2 Driver Installation 132
20.3 Software Overview 133
20.4 Software Installation 134
20.5 Use TSMaster with the Hardware 134
21.Inspection and Maintenance 138

1.About this User Manual

1.1 Warranty

This document is provided for reference only and does not constitute any form of guarantee or commitment from TOSUN. TOSUN Technology reserves the right to modify the content and data of the document without further notice. TOSUN Technology assumes no responsibility for the accuracy of the document or for any damages arising from the use of the document. TOSUN Technology greatly appreciates for pointing out errors or making suggestions for improvement, so that we can provide more efficient products in the future.

1.2 Copyright

TOSUN Technology retains all rights to this document and its contents. Without the explicit written permission of TOSUN Technology, it is prohibited to copy, distribute, transmit, disseminate, republish, or use any part of this document in any manner.

2.Product Overview

2.1 Portable Bus Products

TC1001 TC1011 TC1012P TC1013

	TC1001	TC1011	TC1012P	TC1013
Channel	1x CAN	1x CANFD	1x CANFD 1x LIN	2x CANFD
Baud Rate	CAN: 125k-1Mbps	CAN: 125k-1Mbps CANFD: max 8Mbps	CAN: 125k-1Mbps CANFD: max 8Mbps LIN: 0-20Kbps	CAN: 125k-1Mbps CANFD: max 8Mbps
Transmission Rate (CAN)	19000fps	18000fps	18000fps	20000fps
PC Interface	USB 2.0	USB 2.0	USB 2.0	USB 2.0
Bus Interface	DB9	DB9	DB9	DB9
Insulate	2500V	2500V	2500V	2500V
EMC Compatibility	*	*	*	ESD: ±4kV（contact） ±8kV（air） EFT: ±1kV Surge: ±2kV

Power Supply	5V（USB power supply）	5V（USB power supply）	5V（USB power supply）+ 12V（DC power supply）	5V（USB power supply）
Case Material	Plastics	Plastics	Plastics	Plastics
Dimensions	Approx. 77*58*20mm	Approx. 77*58*20mm	Approx. 77*58*20mm	Approx. 94*48*24mm
Weight	Approx. 77g	Approx. 77g	Approx. 79g	Approx. 176g

*Surge protection can be achieved through the CAN surge protection device described in 2.5 CAN Surge Protection Device.

The EMC Electromagnetic Compatibility test standards in the table are as follows: for ESD, the test standard complies with IEC61000-4-2; for EFT, the test standard complies with IEC61000-4-4; and for Surge, the test standard complies with IEC61000-4-5.

The portable bus interface device is developed by TOSUN. It stands out in the industrial communication field with its superior performance and innovative design, featuring an easy-to-install assembly design. It supports a CANFD bus speed of up to 8Mbps, with a maximum transmission rate exceeding 18,000fps, and can meet the demands of high-speed data transmission. Whether in automotive electronics, industrial automation, or intelligent transportation systems, this device provides stable and reliable support.

In terms of interfaces, it adopts a USB 2.0 port, ensuring fast connection speeds with PCs and greatly enhancing the product's versatility and convenience through this widely used interface. Meanwhile, its driverless design means that users can utilize this series of devices without installing any drivers, significantly improving the plug-and-play functionality and overall user experience.

TC1011
CAN/FD
LINK

2.2 Multi-channel CANFD/LIN Bus Products

	TC1014	TC1016P	TC1017	TC1018	TC1026P
Channel	4x CANFD	4x CANFD 2x LIN	8x CANFD	12x CANFD	1x CANFD 6x LIN
Baud Rate	CAN: 125k-1Mbps CANFD: max 8Mbps	CAN: 125k-1Mbps CANFD: max 8Mbps LIN: 0-20Kbps	CAN: 125k-1Mbps CANFD: max 8Mbps	CAN: 125k-1Mbps CANFD: max 8Mbps	CAN: 125k-1Mbps CANFD: max 8Mbps LIN: 0-20Kbps
Transmission Rate (CAN)	20000fps	20000fps	20000fps	20000fps	20000fps
PC Interface	USB 2.0	USB 2.0	USB 2.0	USB 2.0	USB 2.0
Bus Interface	2x DB9	3x DB9	DB37	DB37	3x DB9
Insulate	2500V	2500V	2500V	2500V	2500V
EMC Compatibility	ESD: ±4kV（contact） ±8kV（air） EFT: ±2kV Surge: ±2kV	ESD: ±4kV（contact） ±8kV（air） EFT: ±2kV Surge: *	ESD: ±4kV（contact） ±8kV（air） EFT: ±2kV Surge: *	ESD: ±4kV（contact） ±8kV（air） EFT: ±2kV Surge: *	ESD: ±4kV（contact） ±8kV（air） EFT: ±2kV Surge: *

Power Supply	5V（USB power supply）	5V（USB power supply）+ 12V(DC power supply）	5V（USB power supply）+ 12V(DC power supply）	5V（USB power supply）+ 12V(DC power supply）	5V（USB power supply）+ 12V(DC power supply）
Case Material	Metal	Metal	Metal	Metal	Metal
Dimension	Approx. 108*91*35mm	Approx. 108*91*35mm	Approx. 108*88*35mm	Approx. 108*88*35mm	Approx. 108*91*35mm
Weight	Approx. 234g	Approx. 248g	Approx. 258g	Approx. 263g	Approx. 254g

*Surge protection can be achieved through the CAN surge protection device described in 2.5 CAN Surge Protection Device.

The EMC Electromagnetic Compatibility test standards in the table are as follows: for ESD, the test standard complies with IEC61000-4-2; for EFT, the test standard complies with IEC61000-4-4; and for Surge, the test standard complies with IEC61000-4-5.

Advanced us (microsecond)-level hardware message timestamps provide strong support for high-precision and high-reliability industrial communication, ensuring the accuracy and synchronization of data transmission in complex industrial environments.

For electrical safety, it features enhanced isolation protection to offer additional safety for devices in harsh electrical environments and reducing the risk of potential electrical interference and damage.

It supports a variety of formats specific to the automotive industry, including ldf, dbc, a2l, blf, asc, and arxml files, enabling the device to meet the diverse needs of the automotive industry and to be widely used in the research, development, and testing of automotive electronics. It supports secondary development under Windows and Linux systems, providing developers with a rich set of interfaces to adapt to different development needs and environments.

2.3 Multi-channel CANFD/FlexRay Bus Product

TC1034

	TC1034
Channel	2x CANFD 2x FlexRay
Baud Rate	CAN: 125k-1Mbps CANFD: max 8Mbps
Transmission Rate (CAN)	20000fps
PC Interface	USB 2.0
Interface Type	2x DB9
Insulate	2500V
EMC Compatibility	ESD: ±4kV（contact） ±8kV（air） EFT: ±4kV Surge: *
Power Supply	5V（USB power supply）
Case Material	Metal
Dimension	Approx. 108*88*35mm
Weight	Approx. 262g

*Surge protection can be achieved through the CAN surge protection device described in 2.5 CAN Surge Protection Device.

The EMC Electromagnetic Compatibility test standards in the table are as follows: for ESD, the test standard complies with IEC61000-4-2; for EFT, the test standard complies with IEC61000-4-4; and for Surge, the test standard complies with IEC61000-4-5.

A high-performance CANFD/FlexRay bus analyzer, designed specifically to meet the testing and analysis needs of high-speed, high-reliability communication networks in the automotive industry.

FlexRay uses dual-line redundancy for data transmission, with each line having its own transmitter and receiver, while also providing extremely low latency and a flexible bandwidth allocation mechanism.

It supports a variety of data types and rich topological structures, and can be used not only as a bus system but also as an element in star or tree network structure.

2.4 Multi-channel CANFD to WiFi Product

TC1113B

TC1114B

	TC1113B	TC1114B
Channel	2x CANFD	4x CANFD
Baud Rate	CAN: 125k-1Mbps CANFD: max 8Mbps	CAN: 125k-1Mbps CANFD: max 8Mbps
Transmission Rate (CAN)	20000fps （under USB mode）	20000fps （under USB mode）
PC Interface	USB 2.0/WiFi	USB 2.0/WiFi
Interface Type	OBD	OBD
Insulate	2500V	2500V
EMC Compatibility	*	*
Power Supply	5V（USB power supply）+ 12V（DC power supply）	5V（USB power supply）+ 12V（DC power supply）
Case Material	Plastic	Plastic
Dimension	Approx. 106*49*26mm	Approx. 106*49*26mm
Weight	Approx. 77g	Approx. 77g

*Surge protection can be achieved through the CAN surge protection device described in 2.5 CAN Surge

Protection Device.

The EMC Electromagnetic Compatibility test standards in the table are as follows: for ESD, the test standard complies with IEC61000-4-2; for EFT, the test standard complies with IEC61000-4-4; and for Surge, the test standard complies with IEC61000-4-5.

Innovative wireless connection design allows for connection to a PC via WiFi, enabling the transmission of CAN/CANFD bus data over a wireless network. By leveraging the advantages of wireless transmission, it greatly enhances the capability of remote data monitoring, providing a powerful data communication solution for the automotive industry.

It supports the IEEE 802.11 b/g/n protocol, with a working channel frequency range of 2412~2484MHz. In the 2.4GHz band, both 20MHz and 40MHz bandwidths are supported.

2.5 CAN Surge Protection Device

The CAN surge protection device is a device used to protect the CAN bus system from damage caused by surges (sudden overvoltage or overcurrent). This device does not require an external power source and is designed with a DB9 interface for good compatibility. It is easy to install and can be used immediately without affecting communication quality.

For the TOSUN products that do not support surge protection, you can achieve CAN channel surge protection by installing the TOSUN DB9 surge protection device, model number TCA00011.

Dimension	Approx. 76*38*25mm
Weight	Approx. 71g
Surge Protection Level	±2KV

Email: sales@tosunai.com

3.General Information

3.1 Bus Data Collection and Analysis

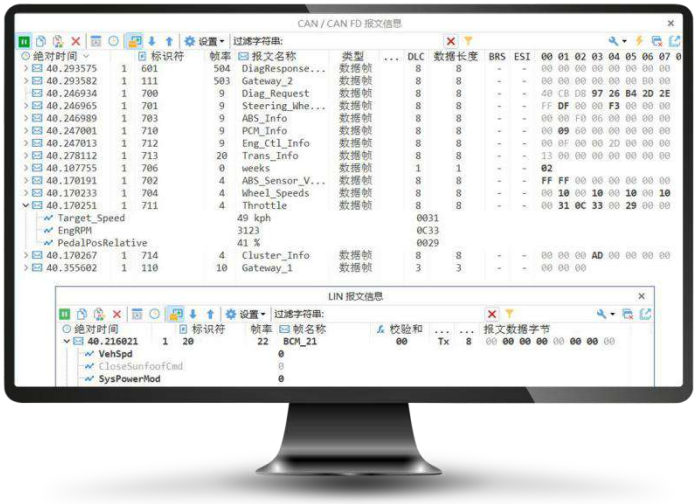

With the TSMaster software, functions such as message sending/monitoring/replay, bus statistics/logging, digital data/graphic form display and analysis, and so on can be achieved.

- Bus Statistics

Bus statistics include: bus load rate, peak load rate, data frame rate, data frame count, error frame rate, error frame count, controller status, and send error count.

- Database

Supports loading databases in formats such as DBC, LDF, XML, ARXML, and can display database structure views, signal communication matrix views, and message communication matrix views.

- Message Replay

Supports offline and online replay of recorded files in formats such as BLF and ASC.

- Message Transmission

Supports manual sending, hotkey sending, and periodic sending. It also supports signal generators and allows for the creation of customized messages and database-based messages.

- Message Monitoring

Supports multiple display modes, DBC parsing to view signal values, channel filtering, and ID filtering.

- Graphical Value Display

The signal's Y-axis is flexible and configurable, supporting multi-axis mode and separated display mode, with the option to precisely display data points, which facilitates user data analysis.

3.2 Bus Simulation

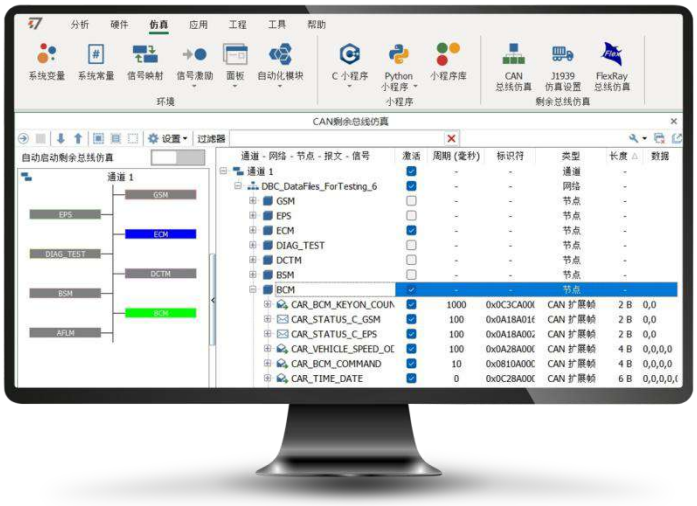

With the TSMaster software, it is possible to achieve multiple buses simulation such as CAN, LIN, and FlexRay. ECU code simulation can also be achieved through soft HIL. The Panel feature built into TSMaster allows bus signals association in the panel to achieve graphical display.

- Supports CAN bus simulation
- Supports LIN bus simulation
- Supports J1939 bus simulation

- Supports FlexRay bus simulation

3.3 Diagnostic

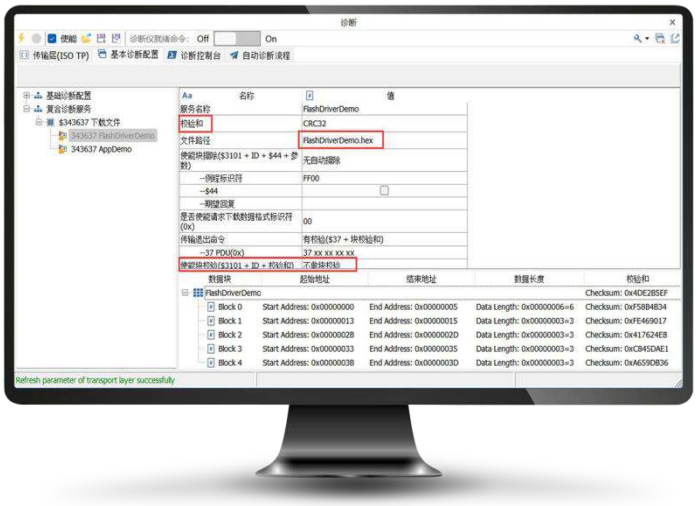

Diagnostic is an important function of automotive ECUs. When the vehicle is in operation, sensors distributed throughout the vehicle can track various potential faults that may occur at any time in the vehicle's electrical or electronic systems. The TOSUN toolchain assists users in conveniently developing and verifying fault diagnosis-related functions, and performing flashing based on the UDS protocol.

- Diagnostic Parameter Configuration

The configuration includes timeout parameter configuration, TesterPresent configuration, and SeedKey DLL configuration. With a built-in SeedKey algorithm editor, user can implement SeedKey algorithms directly without the need for external development tools.

- Basic Diagnostic Configuration

Users can edit the diagnostic database by themselves, including: the settings for various

services, the parameters related to requests and responses and so so.

- Diagnostic Console

Execute the configured diagnostic services, and user can set up automatic comparison to check if the response results are correct.

- Automated Diagnostic Process

Customize diagnostic processes and diagnostic services to facilitate the creation of various Flash Bootloader flashing processes

3.4 Calibration

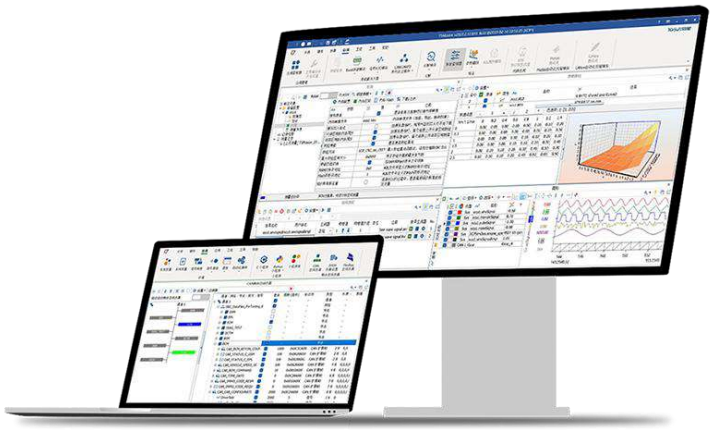

CCP: It is a communication protocol based on CAN (Controller Area Network), mainly used for the calibration and parameter settings of ECUs. It provides the ability to read and write ECU, allowing engineers to read the current parameter values, set new parameter values, and perform real-time testing and adjustments.

XCP: It is a universal measurement and calibration protocol applicable to various

communication interfaces such as CAN and Ethernet. It offers higher transmission rates and more robust capabilities, allowing engineers to quickly read and write large volumes of data in a short period and perform advanced diagnostics and debugging operations.

Automotive calibration is a technique used in the development and diagnostics of automotive ECUs, which involves adjusting the parameters and calibration values of the ECU to optimize the vehicle's performance and functionality. CCP and XCP are common communication protocols used for communication with the ECU, and reading and modifying parameters. These technologies and tools enable vehicle manufacturers and engineers to better perform vehicle tuning and calibration work.

- Supports importing A2L files;
- Supports DAQ/Polling measurement;
- Memory settings, capable of loading images and configuring verification methods, etc;
- Supports characteristic parameter curves, MAP diagrams, etc;
- Supports MDF/MF4 file storage and playback;
- Supports graphical display of variable curves;
- Supports calibration parameter management in par or hex format;
- Built-in message information analysis, diagnostics, calibration, and system variable data are integrated into one, which facilitates a streamlined process of data analysis;
- Automated calibration functions can also be achieved by calling system variables;
- Supports single and multiple file downloads.

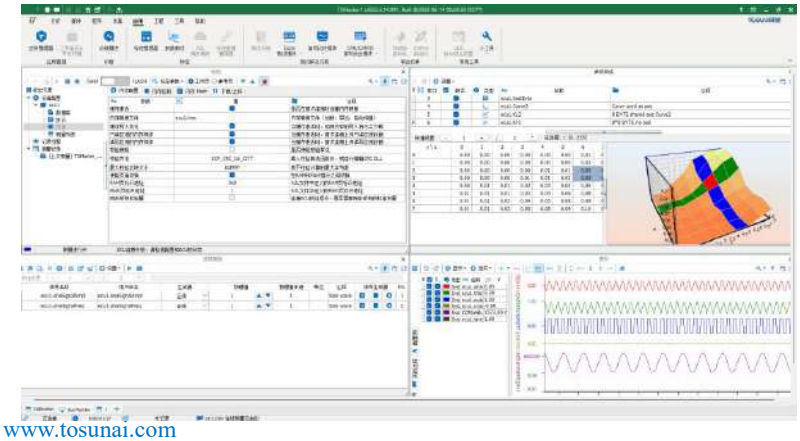

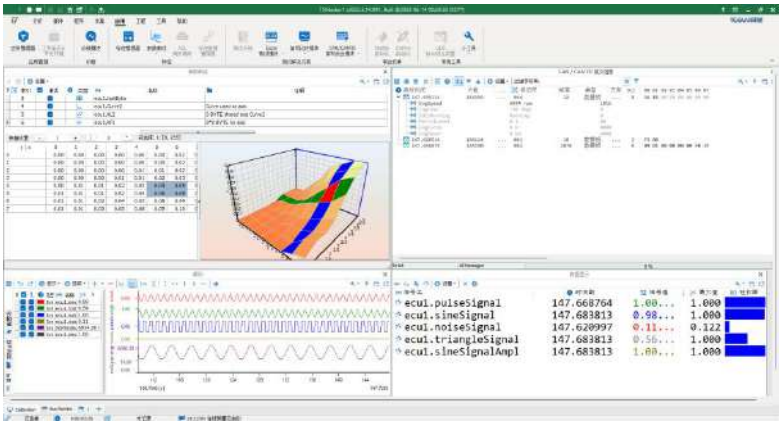

3.5 DoIP Function

The in-vehicle Ethernet diagnostic protocol, known as Diagnostics over Internet Protocol (DoIP), allows for automotive diagnostics through the Ethernet protocol. DoIP is a standard protocol for communication and diagnostics between vehicles or between vehicles and diagnostic equipment. With DoIP, diagnostic engineers can access and diagnose the vehicle's electronic systems via Ethernet or remotely, and can perform diagnostic access and flashing of Ethernet controllers.

- Supports remote access and diagnostics

Achieve remote access and diagnostics of the vehicle's electronic systems via Ethernet, including performing diagnostic access and flashing of Ethernet controllers.

- Diagnostics transport layer configuration

Offers flexible configuration for the diagnostics transport layer, including setting parameters for different types of diagnostic devices and network interfaces.

- Scalability and flexibility

DoIP has good scalability and flexibility, which allows it to be customized and configured according to specific diagnostic requirements and network topology.

- Improve diagnostic efficiency

Diagnosing via Ethernet protocol can enhance diagnostic efficiency and data transmission speed.

- Supports automated diagnostic processes

TSMaster provides automatic diagnostic process functionality, which can help users quickly perform diagnostic tasks, and offers a diagnostic console and automated diagnostic processes.

- Supports multiple hardware devices

To meet the needs of different application scenarios, a variety of hardware devices that support DoIP functions can be used, such as TE1051, TC1051, TC1054, etc.

3.6 Secondary Development

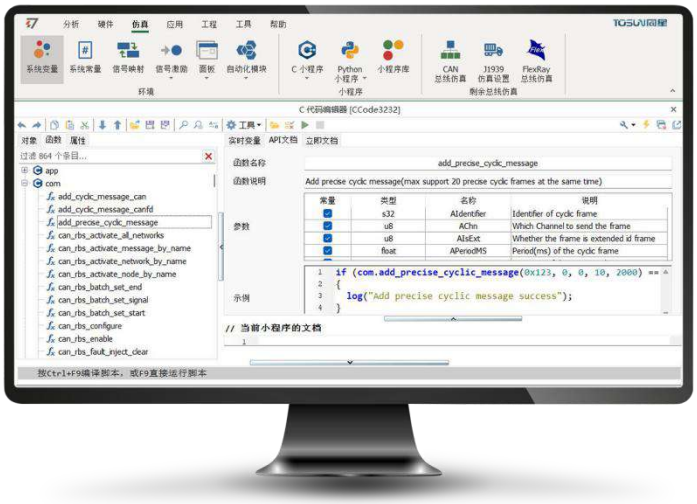

TSMaster provides a rich API library, allowing users to perform secondary development for TSCAN series tools based on different programming languages, calling API functions to achieve programmatic control of the devices, in order to add new functions and meet specific requirements.

- libTSCAN API C#
- libTSCAN API C and C++
- libTSCAN API Python
- ...

4.TC1001

4.1 Overview

The TC1001 is a portable, easy-to-install 1-channel CAN bus to USB interface device launched by TOSUN Technology, with a maximum rate of 1Mbps. The product uses a USB 2.0

interface to connect with the PC and features a driverless design for Windows and Linux systems, ensuring excellent system compatibility.

With the powerful TSMaster software, it supports loading DBC and ARXML database files, making it very convenient to monitor, analyze, and simulate CAN bus data. It also supports functions such as UDS diagnostics, ECU flashing, and CCP/XCP calibration.

The secondary development APIs for Windows and Linux can support various development environments such as C++, C#, LabView, Python, etc., making it highly efficient and easy to use, and is convenient to integrate into various testing systems.

4.2 Features

- ✓ us (microsecond) level hardware message timestamps to meet advanced requirements;
- ✓ Portable design with uniquely designed mounting holes, facilitating integration into various devices or instrument panels;
- ✓ USB 2.0 interface, with a driverless design for Windows and Linux systems, offering excellent system compatibility;
- ✓ CAN channel DC 2500V isolation;
- ✓ Automotive-grade design, supporting dbc files, a2l files, blf files, and asc files;
- ✓ CAN channel baud rate adjustable from 125Kbps to 1Mbps;
- ✓ Supports blf and asc format data recording and offline/online playback;
- ✓ Supports UDS diagnostics and CCP/XCP calibration;
- ✓ Supports UDS based Bootloader flashing;
- ✓ Supports secondary development interfaces for Windows and Linux systems;
- ✓ Built-in 120-ohm terminal resistor, with the resistance value configurable through software;
- ✓ Capable of loading all paid licenses for TSMaster.

4.3 Technical Data

Channel	1 *CAN
PC Interface	USB 2.0
CAN Interface	DB9
Driver	Driverless design for Windows and Linux systems, offering excellent system compatibility
Cache	Hardware cache, with each channel's transmission buffer supporting up to 1000 CAN frames
CAN	Supports CAN 2.0 A and B protocols, compliant with the ISO 11898-1 standard, with baud rates from 125Kbps to 1Mbps
Timestamp Accuracy	1 us, hardware message timestamp, can meet advanced requirements
Terminal Resistor	Built-in 120-ohm terminal resistor, with the resistance value configurable through software
Messages Sent per Second*	Up to 19,000 frames per second
Messages Received per Second*	Up to 19,000 frames per second
Insulate	CAN channel DC 2500V isolation
Power Supply	USB power supply

Power Consumption	1W
Case Material	Plastic
Dimension	Approx. 75*58*20mm
Weight	Approx. 77g (without packaging)/Approx. 199g (with packaging)
Operating Temperature	-40℃～80℃
Operating Humidity	10% ～ 90% (non-condensing)
Operating Environment	Keep away from corrosive gases

*Single channel 1Mbps, with a 0-byte data field.

4.4 Electrical Data

Parameter		Test Condition	Minimum Value	Typical Value	Maximum Value	Unit
Operating Voltage	USB power supply	CAN transmission	4.8	5.0	5.2	V
Operating Current	USB power supply	CAN transmission	--	0.2	--	A
Power Consumption	USB power supply	CAN transmission	--	1.0	--	W
CAN Interface	Bus pin voltage resistance	CANH、CAHL	-58	--	58	V
	Terminal resistor	Terminal resistor enabled	--	120	--	Ω
	Insulate voltage resistance	Leakage current less than 1mA	2500	--	--	VDC

4.5 Mechanical Data

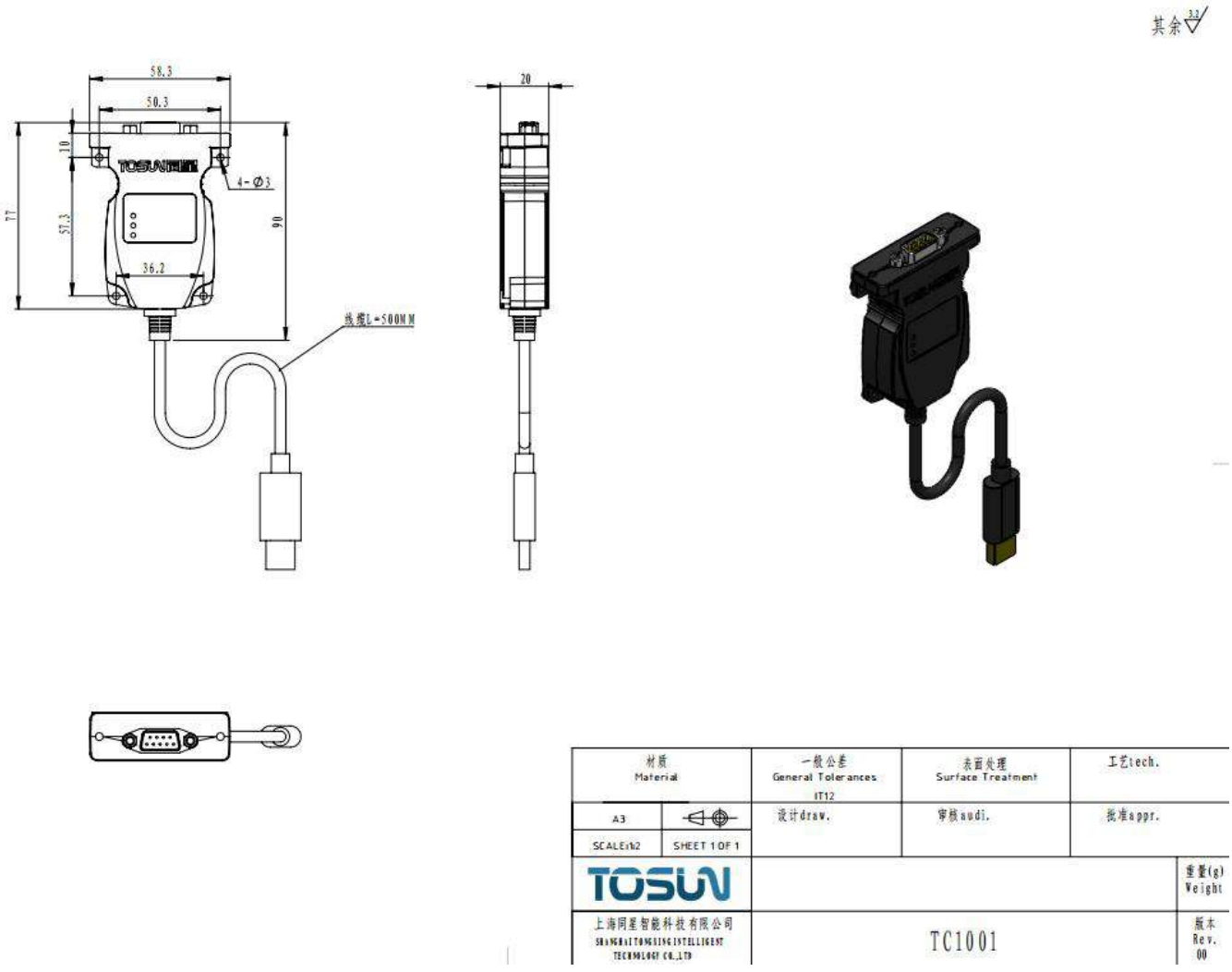

4.6 Scope of Delivery

✓ Main device: TC1001

4.7 Hardware Interface

- USB 2.0 interface;
- DB9 male:

DB9 Pin	PIN Number	Definition
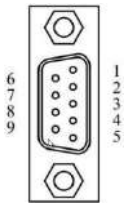	PIN2	CAN_Low
	PIN3	CAN_GND
	PIN5	CAN_Shield
	PIN7	CAN_High

4.8 LED

Diagram of LED indicator:

Description of indicator:

Indicator	Definition
CAN	Indicator for CAN channel
LINK	Indicator for hardware connection

Description of LED color:

Color	Description
LINK Green	The device is connected
CAN Green	CAN channel data frame is sent or received correctly
CAN Red	CAN channel sends or receives error frames, indicating a configuration, protocol, or wiring error

Note: The blinking frequency depends on the bus load.

4.9 Optional Accessories

1.TCA00011 (CAN surge protection device)

5.TC1011

5.1 Overview

TC1011 is a portable, easy-to-install 1-channel CANFD bus to USB interface device launched by TOSUN technology, with a maximum rate of 8 Mbps. The product uses a USB 2.0 interface to connect with the PC and features a driverless design for Windows and Linux systems, ensuring excellent system compatibility.

With the powerful TSMaster software, it supports loading DBC and ARXML database files, making it very convenient to monitor, analyze, and simulate CAN FD bus data, and it also supports functions such as UDS diagnostics, ECU flashing, CCP/XCP calibration, etc.

The secondary development APIs for Windows and Linux can support various development environments such as C++, C#, LabView, Python, etc., making it highly efficient and easy to use, and is convenient to integrate into various testing systems.

5.2 Features

- ✓ us (microsecond) level hardware message timestamps to meet advanced requirements;
- ✓ Portable design with uniquely designed mounting holes, facilitating integration into various devices or instrument panels;
- ✓ USB 2.0 interface, with a driverless design for Windows and Linux systems, offering excellent system compatibility;
- ✓ CAN channel DC 2500V isolation;
- ✓ Automotive-grade design, supporting dbc files, a2l files, blf files, and asc files;
- ✓ CAN channel baud rate adjustable from 125Kbps to 1Mbps, and CANFD supports a maximum of 8Mbps;
- ✓ Supports blf and asc format data recording and offline/online playback;
- ✓ Supports UDS diagnostics and CCP/XCP calibration;
- ✓ Supports UDS based Bootloader flashing;

- ✓ Supports secondary development interfaces for Windows and Linux systems;
- ✓ Built-in 120-ohm terminal resistor, with the resistance value configurable through software;
- ✓ Capable of loading all paid licenses for TSMaster.

5.3 Technical Data

Channel	1 *CANFD
PC Interface	USB 2.0
CAN Interface	DB9
Driver	Driverless design for Windows and Linux systems, offering excellent system compatibility
Cache	Hardware cache, with each channel's transmission buffer supporting up to 1000 CAN frames
CAN	Supports CAN 2.0 A and B protocols, compliant with the ISO 11898-1 standard, with baud rates from 125Kbps to 1Mbps
CANFD	Supports CAN FD that complies with both ISO and non-ISO standards, with baud rates from 125Kbps to 8Mbps
Timestamp Accuracy	1 us, hardware message timestamp, can meet advanced requirements
Terminal Resistor	Built-in 120-ohm terminal resistor, with the resistance value configurable through software
Messages Sent per Second*	Up to 18,000 frames per second
Messages Received per Second*	Up to 18,000 frames per second
Insulate	CAN channel DC 2500V isolation
Power Supply	USB power supply
Power Consumption	1W
Case Material	Plastic
Dimension	Approx. 75*58*20mm
Weight	Approx. 77g (without packaging)/Approx. 199g (with packaging)
Operating Temperature	-40℃～80℃
Operating Humidity	10% ～ 90% (non-condensing)
Operating Environment	Keep away from corrosive gases

*Single channel 1Mbps, with a 0-byte data field.

5.4 Electrical Data

Parameter		Test Condition	Minimum Value	Typical Value	Maximum Value	Unit
Operating Voltage	USB power supply	CAN transmission	4.8	5.0	5.2	V
Operating Current	USB power supply	CAN transmission	--	0.2	--	A
Power Consumption	USB power supply	CAN transmission	--	1.0	--	W
CAN Interface	Bus pin voltage resistance	CANH、CAHL	-58	--	58	V
	Terminal resistor	Terminal resistor enabled	--	120	--	Ω
	Insulate voltage resistance	Leakage current less than 1mA	2500	--	--	VDC

5.5 Mechanical Data

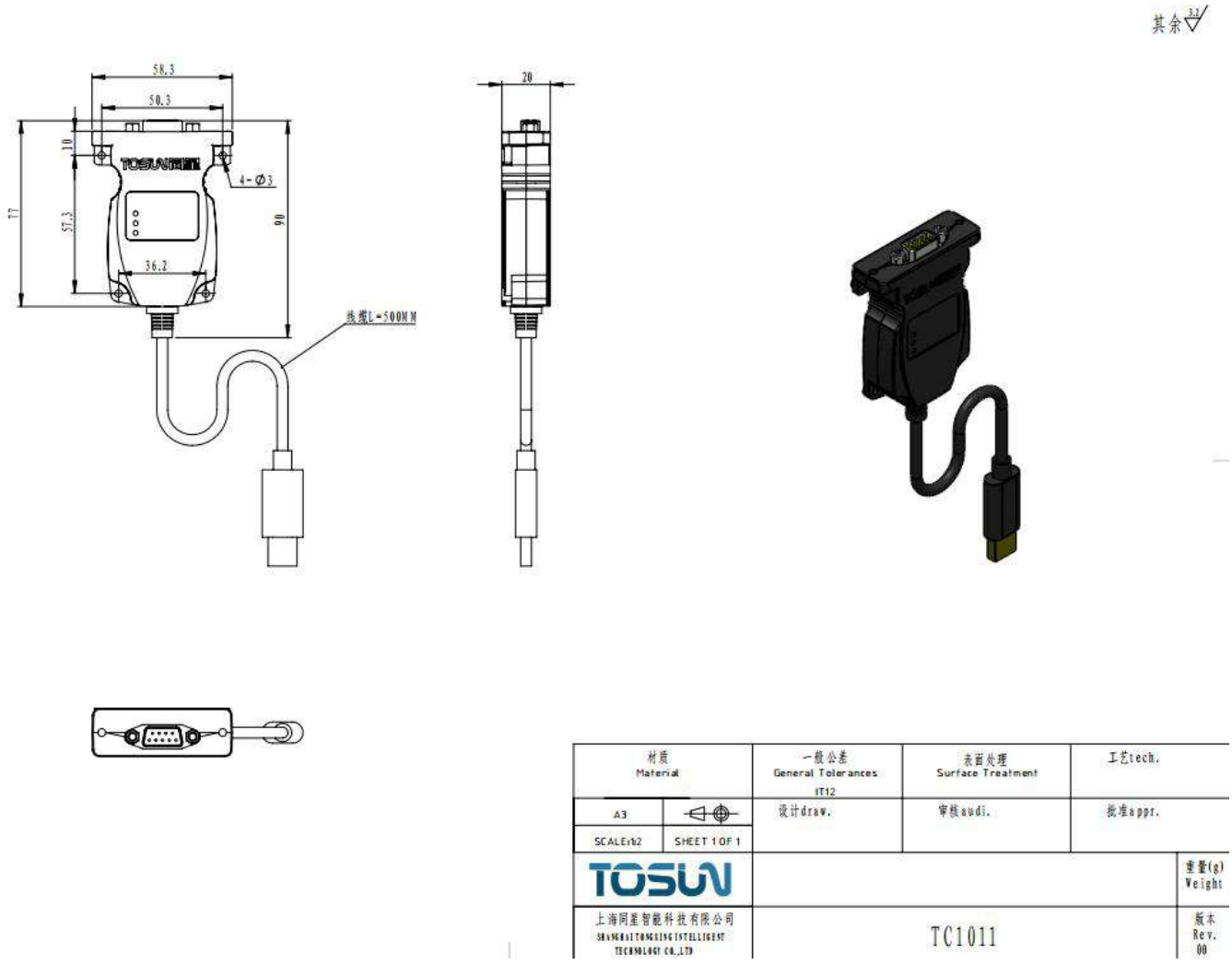

5.6 Scope of Delivery

✓ Main device: TC1011

TC1011

5.7 Hardware Interface

- USB 2.0 interface;
- DB9 male:

DB9 Pin	PIN Number	Definition
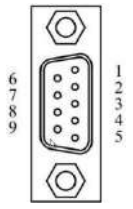	PIN2	CANFD_Low
	PIN3	CANFD_GND
	PIN5	CANFD_Shield
	PIN7	CANFD_High

5.8 LED

Diagram of LED indicator:

Description of indicator:

Indicator	**Definition**
CANFD	Indicator for CANFD channel
LINK	Indicator for hardware connection

Description of LED color:

Color	**Description**
LINK Green	The device is connected
CANFD Green	CANFD channel data frame is sent or received correctly
CANFD Red	CANFD channel sends or receives error frames, indicating a configuration, protocol, or wiring error

Note: The blinking frequency depends on the bus load.

5.9 Optional Accessories

1.TCA00011 (CAN surge protection device)

6.TC1012P

6.1 Overview

TC1012P is a portable, easy-to-install device launched by TOSUN Technology that converts one CANFD/one LIN bus to a USB interface. The CANFD bus supports rates up to 8 Mbps, and the LIN bus device supports rates from 0 to 20 Kbps. The product uses a USB 2.0 interface to connect with the PC and features a driverless design for Windows and Linux systems, ensuring excellent system compatibility.

With the powerful TSMaster software, it supports loading DBC and ARXML database files, making it very convenient to monitor, analyze, and simulate CAN FD/LIN bus data, and it also supports functions such as UDS diagnostics, ECU flashing, CCP/XCP calibration, etc.

The secondary development APIs for Windows and Linux can support various development environments such as C++, C#, LabView, Python, etc., making it highly efficient and easy to use, and is convenient to integrate into various testing systems.

6.2 Features

- ✓ us (microsecond) level hardware message timestamps to meet advanced requirements;
- ✓ Portable design with uniquely designed mounting holes, facilitating integration into various devices or instrument panels;
- ✓ USB 2.0 interface, with a driverless design for Windows and Linux systems, offering excellent system compatibility;
- ✓ CAN channel DC 2500V isolation;
- ✓ Automotive-grade design, supporting dbc files, a2l files, blf files, and asc files;
- ✓ CAN channel baud rate adjustable from 125Kbps to 1Mbps, and CANFD supports a maximum of 8Mbps;
- ✓ The LIN bus primary and secondary nodes can be configured via software;
- ✓ Supports blf and asc format data recording and offline/online playback;
- ✓ Supports UDS diagnostics and CCP/XCP calibration;
- ✓ Supports UDS based Bootloader flashing;

- ✓ Supports secondary development interfaces for Windows and Linux systems;
- ✓ Built-in 120-ohm terminal resistor, with the resistance value configurable through software;
- ✓ Capable of loading all paid licenses for TSMaster.

6.3 Technical Data

Channel	1 *CANFD / 1 *LIN
PC Interface	USB 2.0
CAN/LIN Interface	DB9
Driver	Driverless design for Windows and Linux systems, offering excellent system compatibility
Cache	Hardware cache, with each channel's transmission buffer supporting up to 1000 CAN frames
CAN	Supports CAN 2.0 A and B protocols, compliant with the ISO 11898-1 standard, with baud rates from 125Kbps to 1Mbps
CANFD	Supports CAN FD that complies with both ISO and non-ISO standards, with baud rates from 125Kbps to 8Mbps
LIN	Supports LIN 1.3 and LIN 2.0, with baud rates from 0 to 20Kbps
Schedule Table	Supports LDF files and running schedule tables, and also allows for self-configuration of schedule tables
Timestamp Accuracy	1 us, hardware message timestamp, can meet advanced requirements
Terminal Resistor	Built-in 120-ohm terminal resistor, with the resistance value configurable through software
Messages Sent per Second*	Up to 18,000 frames per second
Messages Received per Second*	Up to 18,000 frames per second
Insulate	CAN channel DC 2500V isolation
Power Supply	USB power supply, external power supply is needed for LIN communication
Power Consumption	1.5W
Case Material	Plastic
Dimension	Approx. 75*58*20mm
Weight	Approx. 77g (without packaging)/Approx. 199g (with packaging)
Operating Temperature	-40℃～80℃
Operating Humidity	10% ～ 90% (non-condensing)
Operating	Keep away from corrosive gases

Environment	

*Single channel 1Mbps, with a 0-byte data field.

6.4 Electrical Data

Parameter		Test Condition	Minimum Value	Typical Value	Maximum Value	Unit
Operating Voltage	USB power supply	CAN transmission/LIN transmission	4.8	5.0	5.2	V
	External DC power supply	CAN transmission/LIN transmission	9	12.0	36	V
Operating Current	USB power supply	CAN transmission/LIN transmission	--	0.23	--	A
	External DC power supply	CAN transmission/LIN transmission	--	0.003	--	A
Power Consumption	USB/DC total	CAN transmission/LIN transmission	--	1.2	--	W
CAN Interface	Bus pin voltage resistance	CANH、CAHL	-58	--	58	V
	Terminal resistor	Terminal resistor enabled	--	120	--	Ω
	Insulate voltage resistance	Leakage current less than 1mA	2500	--	--	VDC
LIN Interface	Bus pin voltage resistance	LIN1	-40	--	40	V

6.5 Mechanical Data

其余 3.2

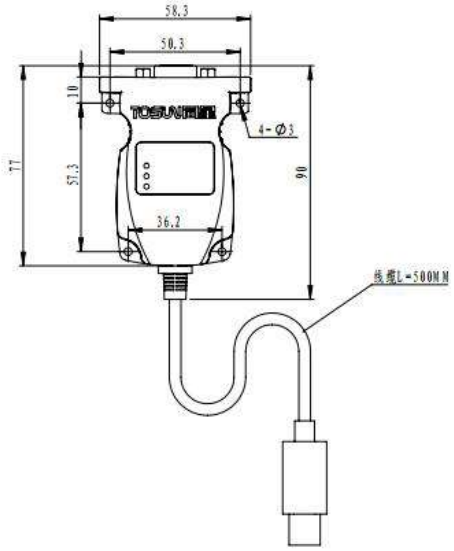

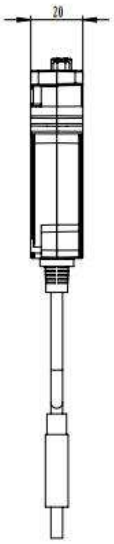

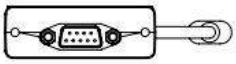

材质 Material		一般公差 General Tolerances IT12	表面处理 Surface Treatment	工艺tech.
A3		设计draw.	审核audi.	批准appr.
SCALE:1:2	SHEET 1 OF 1			
TOSUN				重量(g) Weight
上海同星智能科技有限公司 SHANGHAI TONGXING INTELLIGENT TECHNOLOGY CO.,LTD		TC1012		版本 Rev. 00

6.6 Scope of Delivery

✓ Main device: TC1012P

✓ DB9 female to dual male signal cable (CAN/LIN)

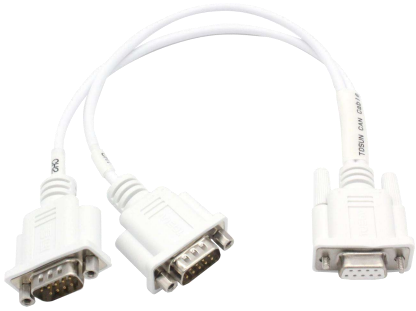

6.7 Hardware Interface

- USB 2.0 interface;
- DB9 male:

DB9 Pin	PIN Number	Definition
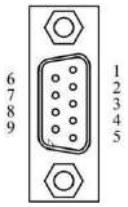	PIN2	CANFD_Low
	PIN3	GND
	PIN5	Shield
	PIN7	CANFD_High
	PIN8	LIN
	PIN9	VBAT_LIN

6.8 LED

Diagram of LED indicator:

Description of indicator:

Indicator	**Definition**
CANFD	Indicator for CANFD channel
LIN	Indicator for LIN channel
LINK	Indicator for hardware connection

Description of LED color:

Color	**Description**
LINK Green	The device is connected
LIN Green	LIN channel data frame is sent or received correctly
LIN Red	LIN channel sends or receives error frames, indicating a configuration, protocol, or wiring error
CANFD Green	CANFD channel data frame is sent or received correctly
CANFD Red	CANFD channel sends or receives error frames, indicating a configuration, protocol, or wiring error

Note: The blinking frequency depends on the bus load.

6.9 Optional Accessories

1.TCA00011 (CAN surge protection device)

7.TC1013

7.1 Overview

TC1013 is a portable and easy-to-install 2-channel CANFD bus to USB interface device launched by TOSUN Technology. It supports rates up to 8 Mbps. The product uses a USB 2.0 interface to connect with the PC and features a driverless design for Windows and Linux systems, ensuring excellent system compatibility.

With the powerful TSMaster software, it supports loading DBC and ARXML database files, making it very convenient to monitor, analyze, and simulate CAN FD bus data, and it also supports functions such as UDS diagnostics, ECU flashing, CCP/XCP calibration, etc.

The secondary development APIs for Windows and Linux can support various development environments such as C++, C#, LabView, Python, etc., making it highly efficient and easy to use, and is convenient to integrate into various testing systems.

7.2 Features

- ✓ us (microsecond) level hardware message timestamps to meet advanced requirements;
- ✓ Portable design with uniquely designed mounting holes, facilitating integration into various devices or instrument panels;
- ✓ USB 2.0 interface, with a driverless design for Windows and Linux systems, offering excellent system compatibility;
- ✓ CAN channel DC 2500V isolation;
- ✓ Automotive-grade design, supporting dbc files, a2l files, blf files, and asc files;
- ✓ CAN channel baud rate adjustable from 125Kbps to 1Mbps, and CANFD supports a maximum of 8Mbps;
- ✓ Supports blf and asc format data recording and offline/online playback;
- ✓ Supports UDS diagnostics and CCP/XCP calibration;

- ✓ Supports UDS based Bootloader flashing;
- ✓ Supports secondary development interfaces for Windows and Linux systems;
- ✓ Built-in 120-ohm terminal resistor, with the resistance value configurable through software;
- ✓ Capable of loading all paid licenses for TSMaster.

7.3 Technical Data

Channel	2 *CANFD
PC Interface	USB 2.0
CAN Interface	DB9
Driver	Driverless design for Windows and Linux systems, offering excellent system compatibility
Cache	Hardware cache, with each channel's transmission buffer supporting up to 1000 CAN frames
CAN	Supports CAN 2.0 A and B protocols, compliant with the ISO 11898-1 standard, with baud rates from 125Kbps to 1Mbps
CANFD	Supports CAN FD that complies with both ISO and non-ISO standards, with baud rates from 125Kbps to 8Mbps
Timestamp Accuracy	1 us, hardware message timestamp, can meet advanced requirements
Terminal Resistor	Built-in 120-ohm terminal resistor, with the resistance value configurable through software
Messages Sent per Second*	Up to 20,000 frames per second
Messages Received per Second*	Up to 20,000 frames per second
Insulate	CAN channel DC 2500V isolation, with an electrostatic discharge level of ±4KV for contact discharge and ±8KV for air discharge
Power Supply	USB power supply
Power Consumption	1.5W
Case Material	Plastic
Dimension	Approx. 94*48*24mm
Weight	Approx.108g (without packaging)/Approx. 325g (with packaging)
Operating Temperature	-40℃～80℃
Operating Humidity	10% ～ 90% (non-condensing)
Operating Environment	Keep away from corrosive gases

*Single channel 1Mbps, with a 0-byte data field.

7.4 Electrical Data

Parameter		Test Condition	Minimum Value	Typical Value	Maximum Value	Unit
Operating Voltage	USB power supply	CAN transmission	4.8	5.0	5.2	V
Operating Current	USB power supply	CAN transmission	--	0.3	--	A
Power Consumption	USB power supply	CAN transmission	--	1.5	--	W
CAN Interface	Bus pin voltage resistance	CANH、CAHL	-58	--	58	V
	Terminal resistor	Terminal resistor enabled	--	120	--	Ω
	Insulate voltage resistance	Leakage current less than 1mA	2500	--	--	VDC
EMC Compatibility	ESD	IEC61000-4-2 standard	Contact discharge: 4 Air discharge: 8	--	--	kV
	EFT	IEC61000-4-4 standard	1	--	--	kV
	Surge	IEC61000-4-5 standard	2	--	--	kV

7.5 Mechanical Data

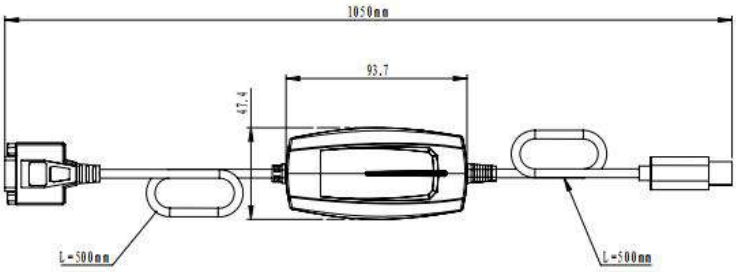

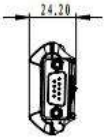

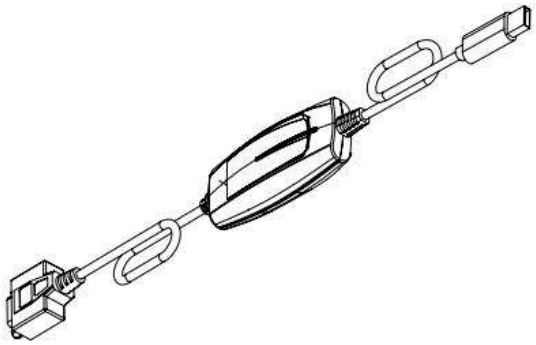

材质 Material		一般公差 General Tolerances IT12	表面处理 Surface Treatment	工艺tech.
A3		设计draw.	审核audi.	批准appr.
SCALE1:2	SHEET 1 OF 1			
TOSUN				重量(g) Weight
上海同星智能科技有限公司 SHANGHAI TONGXING INTELLIGENT TECHNOLOGY CO.,LTD		TC1013 尺寸图		版本 Rev. 00

7.6 Scope of Delivery

✓ Main device: TC1013

✓ DB9 female to dual male signal cable (CAN)

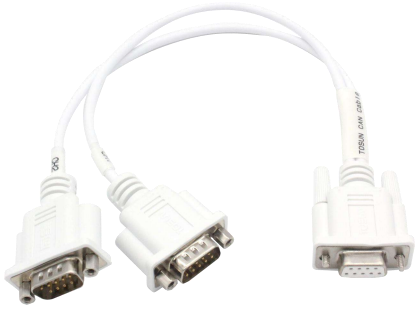

7.7 Hardware Interface

- USB 2.0 interface;
- DB9 male:

DB9 Pin	PIN Number	Definition
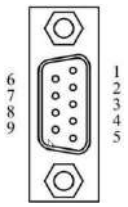	PIN2	CANFD1_Low
	PIN3	CANFD_GND
	PIN4	CANFD2_Low
	PIN5	CANFD_Shield
	PIN7	CANFD1_High
	PIN8	CANFD2_High

7.8 LED

Diagram of LED indicator:

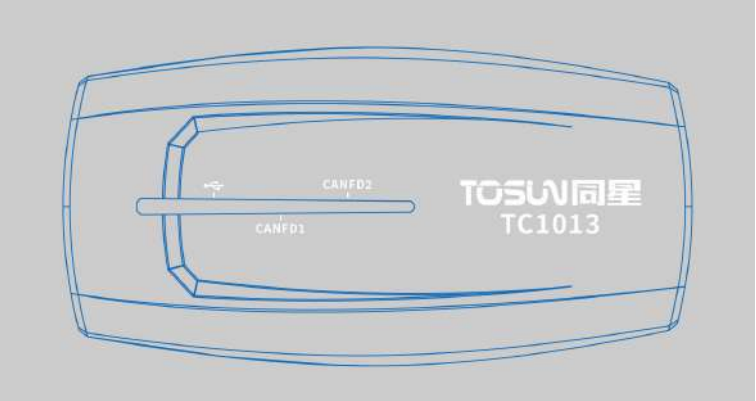

Description of indicator:

Indicator	Definition
CANFD 1	Indicator for CANFD channel 1
CANFD 2	Indicator for CANFD channel 2
LINK	Indicator for hardware connection

Description of LED color:

Color	Description
LINK Green	The device is connected
CANFD Green	CANFD channel data frame is sent or received correctly
CANFD Red	CANFD channel sends or receives error frames, indicating a configuration, protocol, or wiring error

Note: The blinking frequency depends on the bus load.

7.9 Optional Accessories

N/A.

8.TC1014

8.1 Overview

TC1014 is a portable and easy-to-install 4-channel CANFD bus to USB interface device launched by TOSUN Technology. It supports rates up to 8 Mbps. The product uses a USB 2.0 interface to connect with the PC and features a driverless design for Windows and Linux systems, ensuring excellent system compatibility.

With the powerful TSMaster software, it supports loading DBC and ARXML database files, making it very convenient to monitor, analyze, and simulate CAN FD bus data, and it also supports functions such as UDS diagnostics, ECU flashing, CCP/XCP calibration, etc.

The secondary development APIs for Windows and Linux can support various development environments such as C++, C#, LabView, Python, etc., making it highly efficient and easy to use, and is convenient to integrate into various testing systems.

8.2 Features

- ✓ us (microsecond) level hardware message timestamps to meet advanced requirements;
- ✓ USB 2.0 interface, with a driverless design for Windows and Linux systems, offering excellent system compatibility;
- ✓ CAN channel DC 2500V isolation;
- ✓ Automotive-grade design, supporting dbc files, a2l files, blf files, asc files, and arxml files;
- ✓ CAN channel baud rate adjustable from 125Kbps to 1Mbps, and CANFD supports a maximum of 8Mbps;
- ✓ Supports blf and asc format data recording and offline/online playback;
- ✓ Supports UDS diagnostics and CCP/XCP calibration;
- ✓ Supports UDS based Bootloader flashing;
- ✓ Supports information security testing;
- ✓ Supports Windows/Linux system secondary development APIs;
- ✓ Built-in 120-ohm terminal resistor, with the resistance value configurable through software;
- ✓ Capable of loading all paid licenses for TSMaster.

8.3 Technical Data

Channel	4 *CANFD
PC Interface	USB 2.0
CAN Interface	DB9
Driver	Driverless design for Windows and Linux systems, offering excellent system compatibility
Cache	Hardware cache, with each channel's transmission buffer supporting up to 1000 CAN frames
CAN	Supports CAN 2.0 A and B protocols, compliant with the ISO 11898-1 standard, with baud rates from 125Kbps to 1Mbps

CANFD	Supports CAN FD that complies with both ISO and non-ISO standards, with baud rates from 125Kbps to 8Mbps
Timestamp Accuracy	1 us, hardware message timestamp, can meet advanced requirements
Terminal Resistor	Built-in 120-ohm terminal resistor, with the resistance value configurable through software
Messages Sent per Second*	Up to 20,000 frames per second
Messages Received per Second*	Up to 20,000 frames per second
Insulate	CAN channel DC 2500V isolation, with an electrostatic discharge level of ±4KV for contact discharge and ±8KV for air discharge
Power Supply	USB power supply
Power Consumption	2.5W
Case Material	Metal
Dimension	Approx. 108*88*35mm
Weight	Approx. 234g (without packaging)/Approx. 605g (with packaging)
Operating Temperature	-40℃～80℃
Operating Humidity	10% ～ 90% (non-condensing)
Operating Environment	Keep away from corrosive gases

*Single channel 1Mbps, with a 0-byte data field.

8.4 Electrical Data

Parameter		Test Condition	Minimum Value	Typical Value	Maximum Value	Unit
Operating Voltage	USB power supply	CAN transmission	4.8	5.0	5.2	V
Operating Current	USB power supply	CAN transmission	--	0.5	--	A
Power Consumption	USB power supply	CAN transmission	--	2.5	--	W
CAN Interface	Bus pin voltage resistance	CANH、CAHL	-58	--	58	V
	Terminal resistor	Terminal resistor enabled	--	120	--	Ω

	Insulate voltage resistance	Leakage current less than 1mA	2500	--	--	VDC
EMC Compatibility	ESD	IEC61000-4-2 standard	Contact discharge: 4 Air discharge: 8	--	--	kV
	EFT	IEC61000-4-4 standard	2	--	--	kV
	Surge	IEC61000-4-5 standard	2	--	--	kV

8.5 Mechanical Data

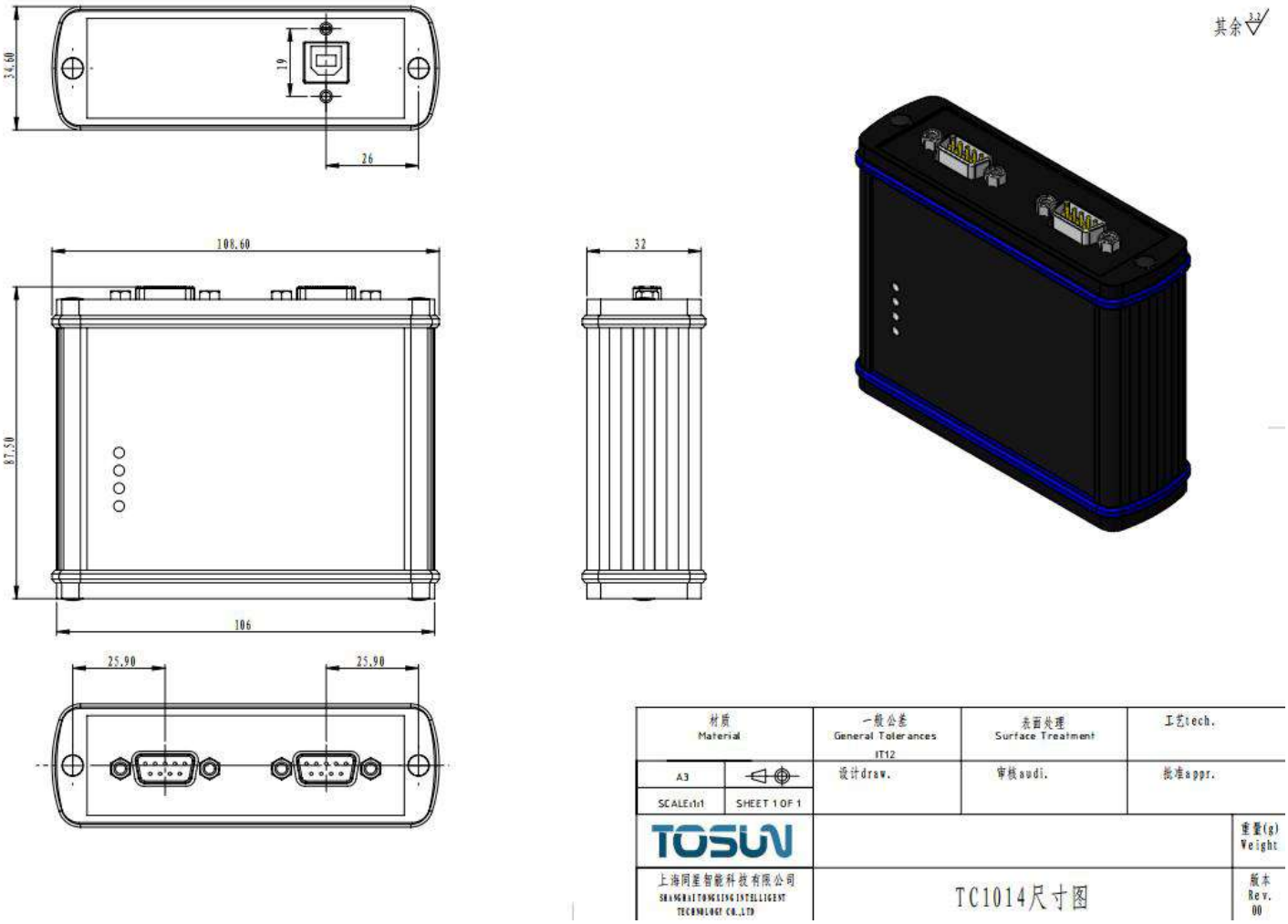

8.6 Scope of Delivery

✓ Main device: TC1014

✓ USB cable

✓ 2*DB9 female to dual male signal cable (CAN)

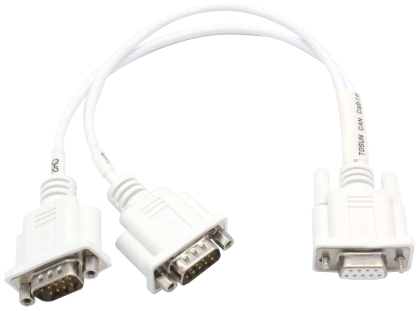

8.7 Hardware Interface

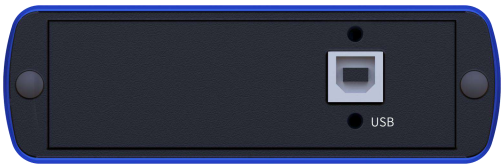

- USB 2.0 interface;
- DB9 male:

DB9 Pin	Channel	PIN Number	Definition	Channel	PIN Number	Definition

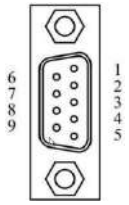	CANFD 1/3	PIN2	CANFD1_Low	CANFD 2/4	PIN2	CANFD2_Low
		PIN3	CANFD_GND		PIN3	CANFD_GND
		PIN4	CANFD3_Low		PIN4	CANFD4_Low
		PIN5	CANFD_Shield		PIN5	CANFD_Shield
		PIN7	CANFD1_High		PIN7	CANFD2_High
		PIN8	CANFD3_High		PIN8	CANFD4_High

8.8 LED

Diagram of LED indicator:

Description of indicator:

Indicator	Definition
CANFD 1	Indicator for CANFD channel 1

CANFD 2	Indicator for CANFD channel 2
CANFD 3	Indicator for CANFD channel 3
CANFD 4	Indicator for CANFD channel 4
LINK	Indicator for hardware connection

Description of LED color:

Color	**Description**
LINK Green	The device is connected
CANFD Green	CANFD channel data frame is sent or received correctly
CANFD Red	CANFD channel sends or receives error frames, indicating a configuration, protocol, or wiring error

Note: The blinking frequency depends on the bus load.

8.9 Optional Accessories

N/A.

9.TC1016P

9.1 Overview

TC1016P is a multi-channel CANFD and LIN bus interface device launched by TOSUN Technology. The CANFD bus rate supports up to 8M bps, and the LIN bus rates supports from 0 to 20K bps. The product uses a USB 2.0 interface to connect with the PC and features a driverless design for Windows and Linux systems, ensuring excellent system compatibility.

With the powerful TSMaster software, it supports loading DBC and ARXML database files, making it very convenient to monitor, analyze, and simulate CAN FD/LIN bus data, and it also supports functions such as UDS diagnostics, ECU flashing, CCP/XCP calibration, etc.

The secondary development APIs for Windows and Linux can support various development environments such as C++, C#, LabView, Python, etc., making it highly efficient and easy to use, and is convenient to integrate into various testing systems.

9.2 Features

- ✓ us (microsecond) level hardware message timestamps to meet advanced requirements;
- ✓ USB 2.0 interface, with a driverless design for Windows and Linux systems, offering excellent system compatibility;
- ✓ CAN channel DC 2500V isolation;
- ✓ Automotive-grade design, supporting LDF, dbc files, a2l files, blf files, asc files, and arxml files;
- ✓ CAN channel baud rate adjustable from 125Kbps to 1Mbps, and CANFD supports a maximum of 8Mbps;
- ✓ The LIN bus primary and secondary nodes can be configured via software;
- ✓ Supports blf and asc format data recording and offline/online playback;
- ✓ Supports UDS diagnostics and CCP/XCP calibration;
- ✓ Supports UDS based Bootloader flashing;
- ✓ Supports LIN bus based UDS diagnostics;
- ✓ Supports information security testing;
- ✓ Supports secondary development interfaces for Windows and Linux systems;
- ✓ Built-in 120-ohm terminal resistor, with the resistance value configurable through software;
- ✓ Capable of loading all paid licenses for TSMaster.

9.3 Technical Data

Channel	4 *CANFD / 2 *LIN
PC Interface	USB 2.0
CAN/LIN Interface	DB9
Driver	Driverless design for Windows and Linux systems, offering excellent system compatibility
Cache	Hardware cache, with each channel's transmission buffer supporting up to 1000 CAN frames
CAN	Supports CAN 2.0 A and B protocols, compliant with the ISO 11898-1 standard, with baud rates from 125Kbps to 1Mbps
CANFD	Supports CAN FD that complies with both ISO and non-ISO standards, with baud rates from 125Kbps to 8Mbps
LIN	Supports LIN 1.3 and LIN 2.x, with baud rates from 0 to 20Kbps
Schedule Table	Supports LDF files and running schedule tables, and also allows for self-configuration of schedule tables

Timestamp Accuracy	1 us, hardware message timestamp, can meet advanced requirements
Terminal Resistor	Built-in 120-ohm terminal resistor, with the resistance value configurable through software
Messages Sent per Second*	Up to 20,000 frames per second
Messages Received per Second*	Up to 20,000 frames per second
Insulate	CAN channel DC 2500V isolation, with an electrostatic discharge level of ±4KV for contact discharge and ±8KV for air discharge
Power Supply	USB power supply, external power supply is needed for LIN communication
Power Consumption	4W
Case Material	Metal
Dimension	Approx. 108*91*35mm
Weight	Approx. 248g (without packaging)/Approx. 692g (with packaging)
Operating Temperature	-40℃～70℃
Operating Humidity	10% ～ 90% (non-condensing)
Operating Environment	Keep away from corrosive gases

*Single channel 1Mbps, with a 0-byte data field.

9.4 Electrical Data

Parameter		Test Condition	Minimum Value	Typical Value	Maximum Value	Unit
Operating Voltage	USB power supply	CAN transmission/LIN transmission	4.8	5.0	5.2	V
	External DC power supply	CAN transmission/LIN transmission	9	12.0	36	V
Operating Current	USB power supply	CAN transmission/LIN transmission	--	0.6	--	A
	External DC power supply	CAN transmission/LIN transmission	--	0.07	--	A
Power	USB/DC	CAN	--	3.9	--	W

Consumption	total	transmission/LIN transmission				
CAN Interface	Bus pin voltage resistance	CANH、CAHL	-58	--	58	V
	Terminal resistor	Terminal resistor enabled	--	120	--	Ω
	Insulate voltage resistance	Leakage current less than 1mA	2500	--	--	VDC
LIN Interface	Bus pin voltage resistance	LIN1、LIN2	-40	--	40	V
EMC Compatibility	ESD	IEC61000-4-2 standard	Contact discharge: 4 Air discharge: 8	--	--	kV
	EFT	IEC61000-4-4 standard	2	--	--	kV

9.5 Mechanical Data

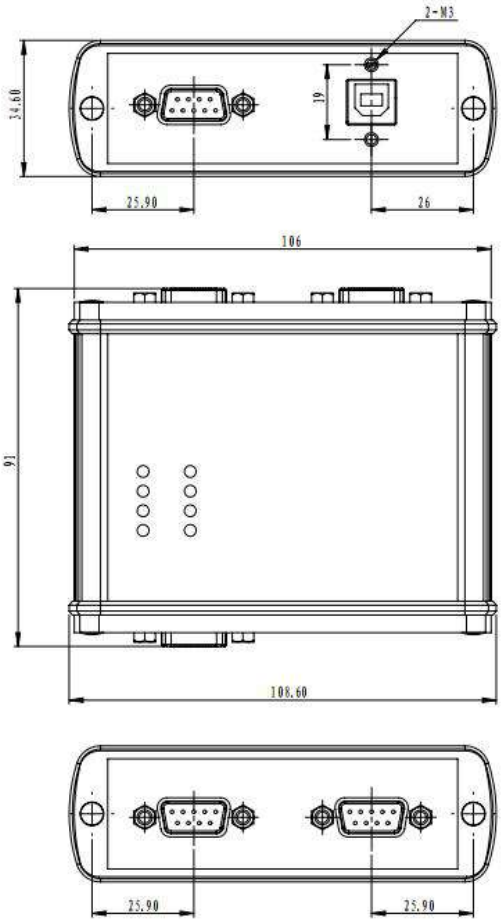

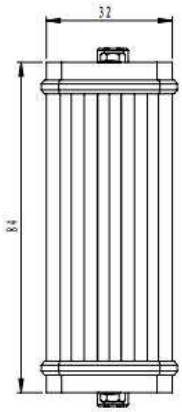

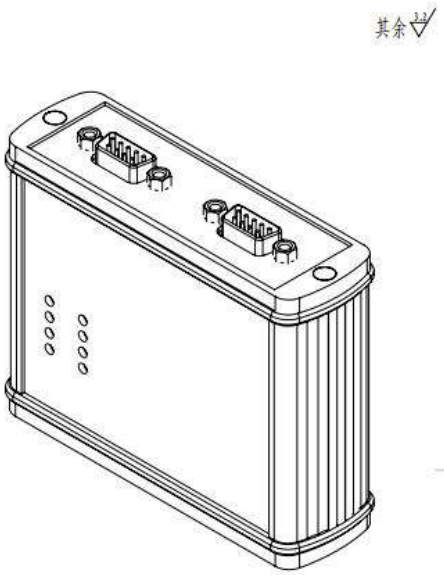

材质 Material		一般公差 General Tolerances IT12	表面处理 Surface Treatment	工艺tech.
A3		设计draw.	审核audi.	批准appr.
SCALE:1:1	SHEET 1 OF 1			
TOSUN				重量(g) Weight
上海同星智能科技有限公司 SHANGHAI TONGXING INTELLIGENT TECHNOLOGY CO.,LTD		TC1016尺寸图		版本 Rev. 00

9.6 Scope of Delivery

✓ Main device: TC1016P

✓ USB cable

✓ 2*DB9 female to dual male signal cable (CAN)

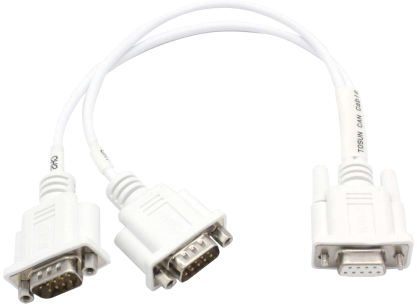

✓ DB9 to 5 banana plugs LIN cable

9.7 Hardware Interface

- USB 2.0 interface;
- DB9 male:

DB9 Pin	Channel	PIN Number	Definition	Channel	PIN Number	Definition
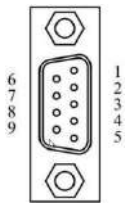	CANFD 1/3	PIN2	CANFD1_Low	CANFD 2/4	PIN2	CANFD2_Low
		PIN3	CANFD_GND		PIN3	CANFD_GND
		PIN4	CANFD3_Low		PIN4	CANFD4_Low
		PIN5	CANFD_Shield		PIN5	CANFD_Shield
		PIN7	CANFD1_High		PIN7	CANFD2_High
		PIN8	CANFD3_High		PIN8	CANFD4_High
	LIN 1/2	PIN2	GND			
		PIN3	GND			
		PIN6	LIN2			
		PIN7	VBAT_LIN2			

		PIN8	LIN1			
		PIN9	VBAT_LIN1			

9.8 LED

Diagram of LED indicator:

Description of indicator:

Indicator	**Definition**
CANFD 1	Indicator for CANFD channel 1
CANFD 2	Indicator for CANFD channel 2
CANFD 3	Indicator for CANFD channel 3
CANFD 4	Indicator for CANFD channel 4

LIN1	Indicator for LIN channel 1
LIN2	Indicator for LIN channel 2
LINK	Indicator for hardware connection

Description of LED color:

Color	**Description**
LINK Green	The device is connected
LIN Green	LIN channel data frame is sent or received correctly
LIN Red	LIN channel sends or receives error frames, indicating a configuration, protocol, or wiring error
CANFD Green	CANFD channel data frame is sent or received correctly
CANFD Red	CANFD channel sends or receives error frames, indicating a configuration, protocol, or wiring error

Note: The blinking frequency depends on the bus load.

9.9 Optional Accessories

1.TCA00011 (CAN surge protection device)

10.TC1017

10.1 Overview

TC1017 is a portable and easy-to-install 8-channel CANFD bus to USB interface device launched by TOSUN Technology. It supports rates up to 8 Mbps. The product uses a USB 2.0 interface to connect with the PC and features a driverless design for Windows and Linux systems, ensuring excellent system compatibility.

With the powerful TSMaster software, it supports loading DBC and ARXML database files, making it very convenient to monitor, analyze, and simulate CAN FD bus data, and it also supports functions such as UDS diagnostics, ECU flashing, CCP/XCP calibration, etc.

The secondary development APIs for Windows and Linux can support various development environments such as C++, C#, LabView, Python, etc., making it highly efficient and easy to use, and is convenient to integrate into various testing systems.

10.2 Features

- ✓ us (microsecond) level hardware message timestamps to meet advanced requirements;
- ✓ USB 2.0 interface, with a driverless design for Windows and Linux systems, offering excellent system compatibility;
- ✓ CAN channel DC 2500V isolation;
- ✓ Automotive-grade design, supporting dbc files, a2l files, blf files, asc files, and arxml files;
- ✓ CAN channel baud rate adjustable from 125Kbps to 1Mbps, and CANFD supports a maximum of 8Mbps;
- ✓ Supports blf and asc format data recording and offline/online playback;
- ✓ Supports UDS diagnostics and CCP/XCP calibration;
- ✓ Supports UDS based Bootloader flashing;
- ✓ Supports information security testing;
- ✓ Supports secondary development interfaces for Windows and Linux systems;
- ✓ Built-in 120-ohm terminal resistor, with the resistance value configurable through software;
- ✓ Capable of loading all paid licenses for TSMaster.

10.3 Technical Data

Channel	8 *CANFD
PC Interface	USB 2.0
CAN Interface	DB37
Driver	Driverless design for Windows and Linux systems, offering excellent system compatibility
Cache	Hardware cache, with each channel's transmission buffer supporting up to 700 CAN frames
CAN	Supports CAN 2.0 A and B protocols, compliant with the ISO 11898-1 standard, with baud rates from 125Kbps to 1Mbps
CANFD	Supports CAN FD that complies with both ISO and non-ISO standards, with baud rates from 125Kbps to 8Mbps
Timestamp Accuracy	1 us, hardware message timestamp, can meet advanced requirements
Terminal Resistor	Built-in 120-ohm terminal resistor, with the resistance value configurable through software
Messages Sent per Second*	Up to 20,000 frames per second
Messages Received per Second*	Up to 20,000 frames per second

Insulate	CAN channel DC 2500V isolation, with an electrostatic discharge level of ±4KV for contact discharge and ±8KV for air discharge
Power Supply	USB power supply+DC power supply (7-18V)
Power Consumption	4W
Case Material	Metal
Dimension	Approx. 108*88*35mm
Weight	Approx. 258g (without packaging)/Approx. 929g (with packaging)
Operating Temperature	-40℃～75℃
Operating Humidity	10% ～ 90% (non-condensing)
Operating Environment	Keep away from corrosive gases

*Single channel 1Mbps, with a 0-byte data field.

10.4 Electrical Data

Parameter		Test Condition	Minimum Value	Typical Value	Maximum Value	Unit
Operating Voltage	USB power supply	CAN transmission	4.8	5.0	5.2	V
	External DC power supply	CAN transmission	7	12.0	18	V
Operating Current	USB power supply	CAN transmission	--	0	--	A
	External DC power supply	CAN transmission	--	0.29	--	A
Power Consumption	USB/DC total	CAN transmission	--	3.5	--	W
CAN Interface	Bus pin voltage resistance	CANH、CAHL	-58	--	58	V
	Terminal resistor	Terminal resistor enabled	--	120	--	Ω
	Insulate voltage resistance	Leakage current less than 1mA	2500	--	--	VDC

EMC Compatibility	ESD	IEC61000-4-2 standard	Contact discharge: 4 Air discharge: 8	--	--	kV
	EFT	IEC61000-4-4 standard	2	--	--	kV

10.5 Mechanical Data

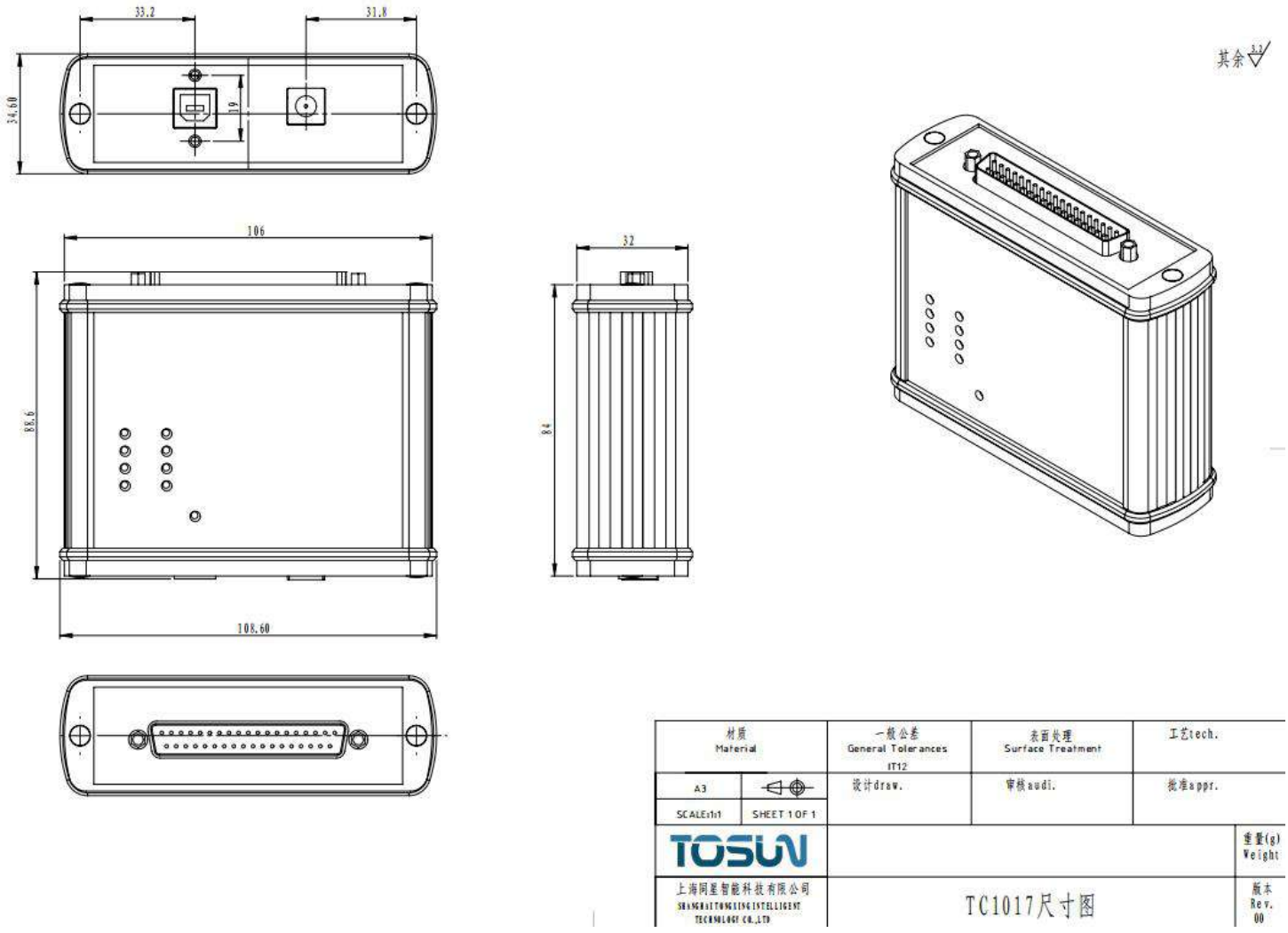

10.6 Scope of Delivery

✓ Main device: TC1017

✓ USB cable

✓ DB37 female to 8-way DB9 signal cable

✓ 12V 2A DC power supply

10.7 Hardware Interface

- USB 2.0 interface;
- DC power supply port;
- DB37 male:

PIN Number	Definition	PIN Number	Definition
PIN20	CANFD1_HIGH	PIN1	CANFD1_LOW
PIN21	CANFD_SHIELD	PIN2	CANFD_GND
PIN22	CANFD2_HIGH	PIN3	CANFD2_LOW
PIN23	CANFD3_HIGH	PIN4	CANFD3_LOW
PIN24	CANFD_SHIELD	PIN5	CANFD_GND
PIN25	CANFD4_HIGH	PIN6	CANFD4_LOW
PIN26	CANFD5_HIGH	PIN7	CANFD5_LOW
PIN27	CANFD_SHIELD	PIN8	CANFD_GND
PIN28	CANFD6_HIGH	PIN9	CANFD6_LOW
PIN29	CANFD7_HIGH	PIN10	CANFD7_LOW
PIN30	CANFD_SHIELD	PIN11	CANFD_GND
PIN31	CANFD8_HIGH	PIN12	CANFD8_LOW

10.8 LED

Diagram of LED indicator:

Description of indicator:

Indicator	Definition
CANFD 1	Indicator for CANFD channel 1
CANFD 2	Indicator for CANFD channel 2
CANFD 3	Indicator for CANFD channel 3
CANFD 4	Indicator for CANFD channel 4
CANFD 5	Indicator for CANFD channel 5
CANFD 6	Indicator for CANFD channel 6
CANFD 7	Indicator for CANFD channel 7
CANFD 8	Indicator for CANFD channel 8
LINK	Indicator for hardware connection

Description of LED color:

Color	Description
LINK Green	The device is connected
CANFD Green	CANFD channel data frame is sent or received correctly
CANFD Red	CANFD channel sends or receives error frames, indicating a configuration, protocol, or wiring error

Note: The blinking frequency depends on the bus load.

10.9 Optional Accessories

1.TCA00011 (CAN surge protection device)

11.TC1018

11.1 Overview

TC1018 is a portable and easy-to-install 12-channel CANFD bus to USB interface device launched by TOSUN Technology. It supports rates up to 8 Mbps. The product uses a USB 2.0 interface to connect with the PC and features a driverless design for Windows and Linux systems, ensuring excellent system compatibility.

With the powerful TSMaster software, it supports loading DBC and ARXML database files, making it very convenient to monitor, analyze, and simulate CAN FD bus data, and it also supports functions such as UDS diagnostics, ECU flashing, CCP/XCP calibration, etc.

The secondary development APIs for Windows and Linux can support various development environments such as C++, C#, LabView, Python, etc., making it highly efficient and easy to use, and is convenient to integrate into various testing systems.

11.2 Features

- ✓ us (microsecond) level hardware message timestamps to meet advanced requirements;
- ✓ USB 2.0 interface, with a driverless design for Windows and Linux systems, offering excellent system compatibility;
- ✓ CAN channel DC 2500V isolation;
- ✓ Automotive-grade design, supporting dbc files, a2l files, blf files, asc files, and arxml files;
- ✓ CAN channel baud rate adjustable from 125Kbps to 1Mbps, and CANFD supports a maximum of 8Mbps;
- ✓ Supports blf and asc format data recording and offline/online playback;
- ✓ Supports UDS diagnostics and CCP/XCP calibration;
- ✓ Supports UDS based Bootloader flashing;
- ✓ Supports information security testing;
- ✓ Supports secondary development interfaces for Windows and Linux systems;
- ✓ Built-in 120-ohm terminal resistor, with the resistance value configurable through software;
- ✓ Capable of loading all paid licenses for TSMaster.

11.3 Technical Data

Channel	12 *CANFD
PC Interface	USB 2.0
CAN Interface	DB37
Driver	Driverless design for Windows and Linux systems, offering excellent system compatibility
Cache	Hardware cache, with each channel's transmission buffer supporting up to 700 CAN frames
CAN	Supports CAN 2.0 A and B protocols, compliant with the ISO 11898-1 standard, with baud rates from 125Kbps to 1Mbps
CANFD	Supports CAN FD that complies with both ISO and non-ISO standards, with baud rates from 125Kbps to 8Mbps
Timestamp Accuracy	1 us, hardware message timestamp, can meet advanced requirements
Terminal Resistor	Built-in 120-ohm terminal resistor, with the resistance value configurable through software
Messages Sent per Second*	Up to 20,000 frames per second
Messages Received per Second*	Up to 20,000 frames per second

Insulate	CAN channel DC 2500V isolation, with an electrostatic discharge level of ±4KV for contact discharge and ±8KV for air discharge
Power Supply	USB power supply + DC power supply (7-18V)
Power Consumption	5W
Case Material	Metal
Dimension	Approx. 108*88*35mm
Weight	Approx. 263g (without packaging)/Approx.1068g (with packaging)
Operating Temperature	-40℃～75℃
Operating Humidity	10% ～ 90% (non-condensing)
Operating Environment	Keep away from corrosive gases

*Single channel 1Mbps, with a 0-byte data field.

11.4 Electrical Data

Parameter		Test Condition	Minimum Value	Typical Value	Maximum Value	Unit
Operating Voltage	USB power supply	CAN transmission	4.8	5.0	5.2	V
	External DC power supply	CAN transmission	7	12.0	18	V
Operating Current	USB power supply	CAN transmission	--	0	--	A
	External DC power supply	CAN transmission	--	0.33	--	A
Power Consumption	USB/DC total	CAN transmission	--	4.0	--	W
CAN Interface	Bus pin voltage resistance	CANH、CAHL	-58	--	58	V
	Terminal resistor	Terminal resistor enabled	--	120	--	Ω

	Insulate voltage resistance	Leakage current less than 1mA	2500	--	--	VDC
EMC Compatibility	ESD	IEC61000-4-2 standard	Contact discharge :4 Air discharge :8	--	--	kV
	EFT	IEC61000-4-4 standard	2	--	--	kV

11.5 Mechanical Data

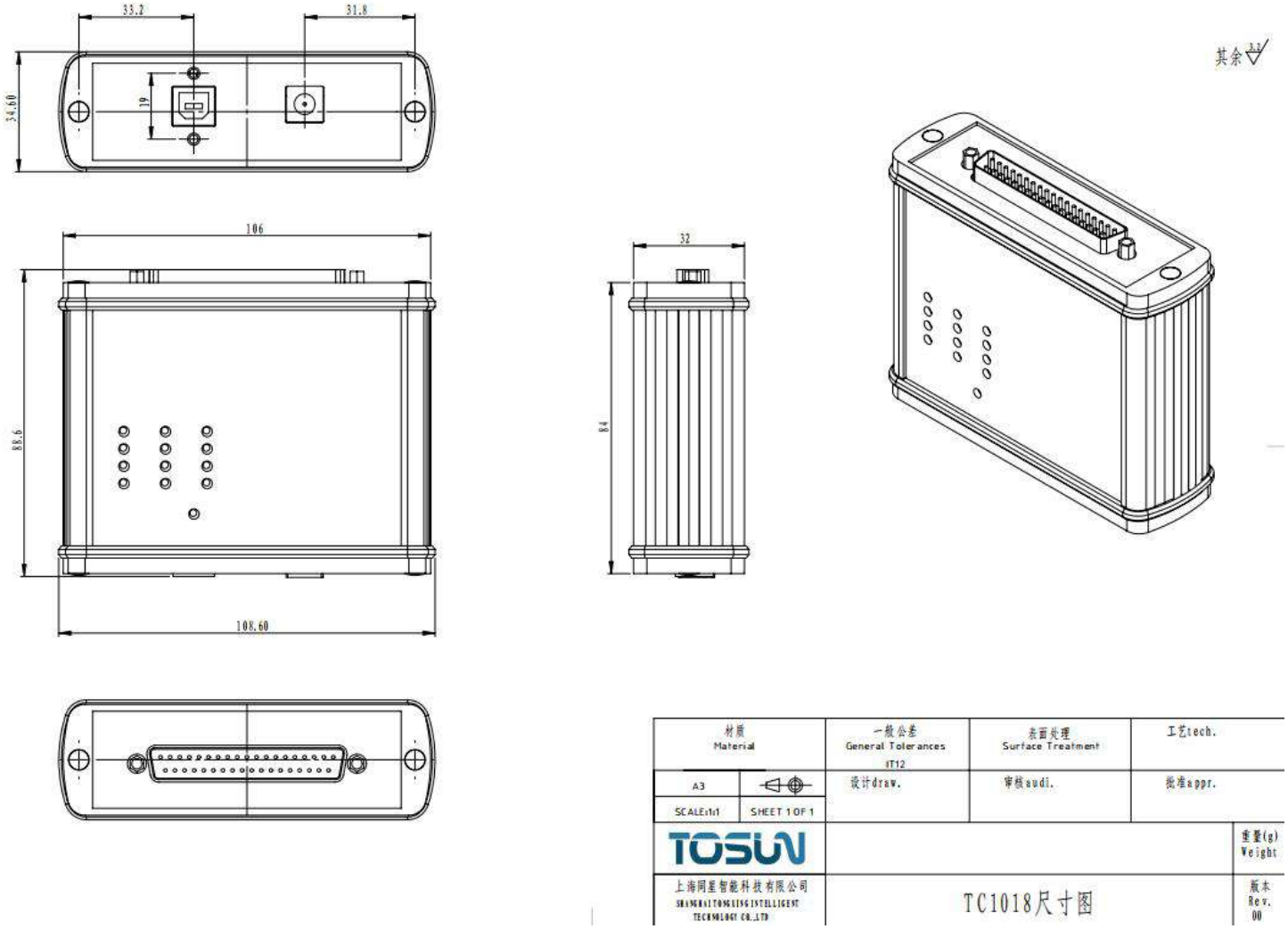

材质 Material		一般公差 General Tolerances IT12	表面处理 Surface Treatment	工艺tech.
A3		设计draw.	审核audi.	批准appr.
SCALE:1:1	SHEET 1 OF 1			
TOSUN				重量(g) Weight
上海同星智能科技有限公司 SHANGHAI TONGXING INTELLIGENT TECHNOLOGY CO.,LTD		TC1018尺寸图		版本 Rev. 00

11.6 Scope of Delivery

✓ Main device: TC1018

✓ USB cable

✓ DB37 female to 8-way DB9 signal cable

✓ 12V 2A DC power supply

11.7 Hardware Interface

- USB 2.0 interface;
- DC power supply port;
- DB37 male:

PIN Number	Definition	PIN Number	Definition
PIN20	CANFD1_HIGH	PIN1	CANFD1_LOW
PIN21	CANFD_SHIELD	PIN2	CANFD_GND
PIN22	CANFD2_HIGH	PIN3	CANFD2_LOW
PIN23	CANFD3_HIGH	PIN4	CANFD3_LOW
PIN24	CANFD_SHIELD	PIN5	CANFD_GND
PIN25	CANFD4_HIGH	PIN6	CANFD4_LOW
PIN26	CANFD5_HIGH	PIN7	CANFD5_LOW
PIN27	CANFD_SHIELD	PIN8	CANFD_GND
PIN28	CANFD6_HIGH	PIN9	CANFD6_LOW
PIN29	CANFD7_HIGH	PIN10	CANFD7_LOW
PIN30	CANFD_SHIELD	PIN11	CANFD_GND

PIN31	CANFD8_HIGH	PIN12	CANFD8_LOW
PIN32	CANFD9_HIGH	PIN13	CANFD9_LOW
PIN33	CANFD_SHIELD	PIN14	CANFD_GND
PIN34	CANFD10_HIGH	PIN15	CANFD10_LOW
PIN35	CANFD11_HIGH	PIN16	CANFD11_LOW
PIN36	CANFD_SHIELD	PIN17	CANFD_GND
PIN37	CANFD12_HIGH	PIN18	CANFD12_LOW
		PIN19	CANFD_GND

11.8 LED

Diagram of LED indicator:

Description of indicator:

Indicator	**Definition**
CANFD 1	Indicator for CANFD channel 1
CANFD 2	Indicator for CANFD channel 2
CANFD 3	Indicator for CANFD channel 3
CANFD 4	Indicator for CANFD channel 4
CANFD 5	Indicator for CANFD channel 5
CANFD 6	Indicator for CANFD channel 6
CANFD 7	Indicator for CANFD channel 7
CANFD 8	Indicator for CANFD channel 8

CANFD 9	Indicator for CANFD channel 9
CANFD 10	Indicator for CANFD channel 10
CANFD 11	Indicator for CANFD channel 11
CANFD 12	Indicator for CANFD channel 12
LINK	Indicator for hardware connection

Description of LED color:

Color	**Description**
LINK Green	The device is connected
CANFD Green	CANFD channel data frame is sent or received correctly
CANFD Red	CANFD channel sends or receives error frames, indicating a configuration, protocol, or wiring error

Note: The blinking frequency depends on the bus load.

11.9 Optional Accessories

1.TCA00011 (CAN surge protection device)

12.TC1026P

12.1 Overview

TC1026P is a multi-channel CANFD and LIN bus interface device launched by TOSUN Technology. The CANFD bus rate supports up to 8M bps, and the LIN bus rates supports from 0 to 20K bps. The product uses a USB 2.0 interface to connect with the PC and features a driverless design for Windows and Linux systems, ensuring excellent system compatibility.

With the powerful TSMaster software, it supports loading DBC and ARXML database files, making it very convenient to monitor, analyze, and simulate CAN FD/LIN bus data, and it also supports functions such as UDS diagnostics, ECU flashing, CCP/XCP calibration, etc.

The secondary development APIs for Windows and Linux can support various development environments such as C++, C#, LabView, Python, etc., making it highly efficient and easy to use, and is convenient to integrate into various testing systems.

12.2 Features

- ✓ us (microsecond) level hardware message timestamps to meet advanced requirements;
- ✓ USB 2.0 interface, with a driverless design for Windows and Linux systems, offering excellent system compatibility;
- ✓ CAN channel DC 2500V isolation;
- ✓ Automotive-grade design, supporting LDF, dbc files, a2l files, blf files, asc files, and arxml files;
- ✓ CAN channel baud rate adjustable from 125Kbps to 1Mbps, and CANFD supports a maximum of 8Mbps;
- ✓ The LIN bus primary and secondary nodes can be configured via software;
- ✓ Supports blf and asc format data recording and offline/online playback;
- ✓ Supports UDS diagnostics and CCP/XCP calibration;
- ✓ Supports UDS based Bootloader flashing;
- ✓ Supports LIN bus based UDS diagnostics;
- ✓ Supports information security testing;
- ✓ Supports secondary development interfaces for Windows and Linux systems;
- ✓ Built-in 120-ohm terminal resistor, with the resistance value configurable through software;
- ✓ Capable of loading all paid licenses for TSMaster.

12.3 Technical Data

Channel	1 *CANFD / 6 *LIN
PC Interface	USB 2.0
CAN/LIN Interface	DB9
Driver	Driverless design for Windows and Linux systems, offering excellent system compatibility
Cache	Hardware cache, with each channel's transmission buffer supporting up to 1000 CAN frames
CAN	Supports CAN 2.0 A and B protocols, compliant with the ISO 11898-1 standard, with baud rates from 125Kbps to 1Mbps
CANFD	Supports CAN FD that complies with both ISO and non-ISO standards, with baud rates from 125Kbps to 8Mbps
LIN	Supports LIN 1.3 and LIN 2.0, with baud rates from 0 to 20Kbps
Schedule Table	Supports LDF files and running schedule tables, and also allows for self-configuration of schedule tables.
Timestamp	1 us, hardware message timestamp, can meet advanced requirements

Accuracy	
Terminal Resistor	Built-in 120-ohm terminal resistor, with the resistance value configurable through software
Messages Sent per Second*	Up to 20,000 frames per second
Messages Received per Second*	Up to 20,000 frames per second
Insulate	CAN channel DC 2500V isolation, with an electrostatic discharge level of ±4KV for contact discharge and ±8KV for air discharge
Power Supply	USB power supply, external power supply is needed for LIN communication
Power Consumption	3W
Case Material	Metal
Dimension	Approx. 108*91*35mm
Weight	Approx. 252g (without packaging)/Approx. 699g (with packaging)
Operating Temperature	-40℃～80℃
Operating Humidity	10% ～ 90% (non-condensing)
Operating Environment	Keep away from corrosive gases

*Single channel 1Mbps, with a 0-byte data field.

12.4 Electrical Data

Parameter		Test Condition	Minimum Value	Typical Value	Maximum Value	Unit
Operating Voltage	USB power supply	CAN transmission/LIN transmission	4.8	5.0	5.2	V
	External DC power supply	CAN transmission/LIN transmission	9	12.0	36	V
Operating Current	USB power supply	CAN transmission/LIN transmission	--	0.48	--	A
	External DC power supply	CAN transmission/LIN transmission	--	0.02	--	A
Power	USB/DC	CAN	--	2.7	--	W

Consumption	total	transmission/LIN transmission				
CAN Interface	Bus pin voltage resistance	CANH、CAHL	-58	--	58	V
	Terminal resistor	Terminal resistor enabled	--	120	--	Ω
	Insulate voltage resistance	Leakage current less than 1mA	2500	--	--	VDC
LIN Interface	Bus pin voltage resistance	LIN1、LIN2	-40	--	40	V
EMC Compatibility	ESD	IEC61000-4-2 standard	Contact discharge :4 Air discharge :8	--	--	kV
	EFT	IEC61000-4-4 standard	2	--	--	kV

12.5 Mechanical Data

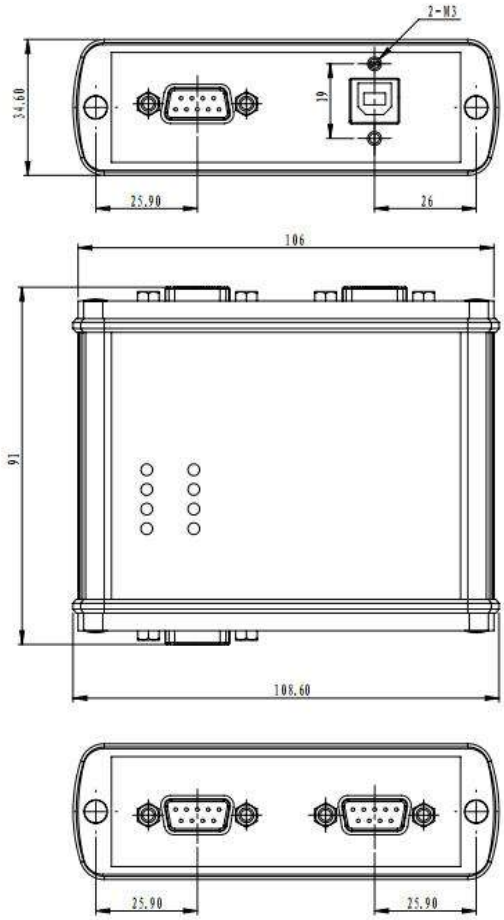

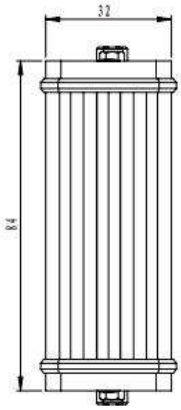

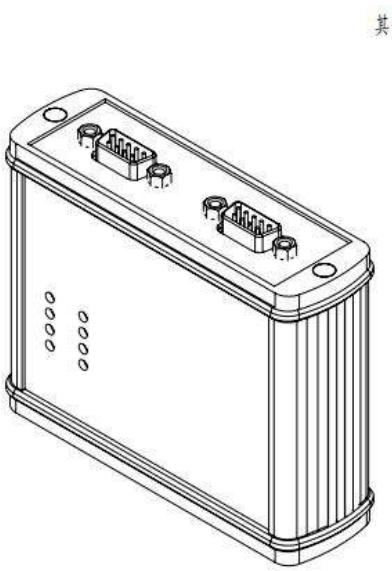

材质 Material		一般公差 General Tolerances IT12	表面处理 Surface Treatment	工艺tech.
A3		设计draw.	审核audi.	批准appr.
SCALE1:1	SHEET 1 OF 1			
TOSUN				重量(g) Weight
上海同星智能科技有限公司 SHANGHAI TONGXING INTELLIGENT TECHNOLOGY CO.,LTD		TC1016尺寸图		版本 Rev. 00

12.6 Scope of Delivery

✓ Main device: TC1026P

✓ USB cable

✓ 2 * DB9 to 9 banana plugs LIN cable

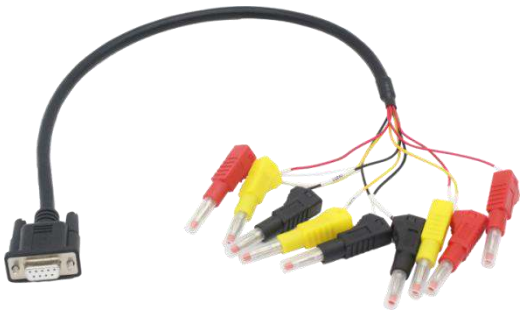

12.7 Hardware Interface

- USB 2.0 interface;
- DB9 male:

DB9 Pin	Channel	PIN Number	Definition	Channel	PIN Number	Definition
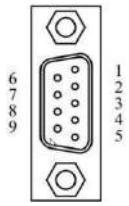	LIN 1/2/3	PIN1	GND3	LIN 4/5/6	PIN1	GND6
		PIN2	GND2		PIN2	GND5
		PIN3	GND1		PIN3	GND4
		PIN4	LIN3		PIN4	LIN6
		PIN5	VBAT_LIN3		PIN5	VBAT_LIN6
		PIN6	LIN2		PIN6	LIN5
		PIN7	VBAT_LIN2		PIN7	VBAT_LIN5
		PIN8	LIN1		PIN8	LIN4
		PIN9	VBAT_LIN1		PIN9	VBAT_LIN4
	CANFD	PIN2	CANFD_Low			
		PIN3	CANFD_GND			
		PIN5	CANFD_Shield			
		PIN7	CANFD_High			

12.8 LED

Diagram of LED indicator:

Description of indicator:

Indicator	Definition
LIN1	Indicator for LIN channel 1
LIN2	Indicator for LIN channel 2
LIN3	Indicator for LIN channel 3
LIN4	Indicator for LIN channel 4
LIN5	Indicator for LIN channel 5
LIN6	Indicator for LIN channel 6
CANFD	Indicator for CANFD channel
LINK	Indicator for hardware connection

Description of LED color:

Color	Description
LINK Green	The device is connected
LIN Green	LIN channel data frame is sent or received correctly
LIN Red	LIN channel sends or receives error frames, indicating a

	configuration, protocol, or wiring error
CANFD Green	CANFD channel data frame is sent or received correctly
CANFD Red	CANFD channel sends or receives error frames, indicating a configuration, protocol, or wiring error

Note: The blinking frequency depends on the bus load.

12.9 Optional Accessories

1.TCA00011 (CAN surge protection device)

13.TC1034

13.1 Overview

TC1034 is a high-performance multi-channel CANFD and FlexRay bus interface device launched by TOSUN Technology. The CANFD bus rate supports up to 8 Mbps, and FlexRay uses a dual-line redundant method for data transmission, providing very low latency and flexible bandwidth allocation mechanism. It supports various data types and rich topological structures, and can be used as a bus system or as an element in star/tree network structure. The product uses a USB 2.0 interface to connect with the PC and features a driverless design for Windows and Linux systems, ensuring excellent system compatibility.

With the powerful TSMaster software, it supports loading DBC and ARXML database files, making it very convenient to monitor, analyze, and simulate CAN FD/FlexRay bus data, and it also supports functions such as UDS diagnostics, ECU flashing, CCP/XCP calibration, etc. It can also easily handle tasks such as FlexRay network development, simulation, testing, etc.

The secondary development APIs for Windows and Linux can support various development environments such as C++, C#, LabView, Python, etc., making it highly efficient and easy to use, and is convenient to integrate into various testing systems.

13.2 Features

- ✓ us (microsecond) level hardware message timestamps to meet advanced requirements;
- ✓ USB 2.0 interface, with a driverless design for Windows and Linux systems, offering excellent system compatibility;
- ✓ CAN channel DC 2500V isolation;
- ✓ Automotive-grade design, supporting dbc files, a2l files, blf files, asc files, and arxml files;
- ✓ CAN channel baud rate adjustable from 125Kbps to 1Mbps, and CANFD supports a maximum of 8Mbps;
- ✓ Supports blf and asc format data recording and offline/online playback;
- ✓ Supports UDS diagnostics and CCP/XCP calibration;
- ✓ Supports UDS based Bootloader flashing;
- ✓ For CAN, built-in 120-ohm terminal resistor, with the resistance value configurable through software;
- ✓ For FlexRay, built-in 100-ohm terminal resistor, with the resistance value configurable through software;
- ✓ Auxiliary communication controller, eliminating the need to add extra nodes during cold starts;
- ✓ Perfectly adapts to FlexRay, CAN/CANFD bus applications based on TSMaster;
- ✓ Supports secondary development interfaces for Windows and Linux systems;

13.3 Main Functions of FlexRay

- Flexible configuration for communication controller buffer;
- Capable to detect empty frame;
- Capable of forming composite communication modes through multiple cycles (Cycle multiplexing);
- Supports frame payloads up to a maximum of 254 bytes;
- Supports PDUs;
- Features a start-up monitoring function;
- Supports FlexRay message recording and replay;
- Supports using two FlexRay channels as two separate FlexRay nodes (parallel connected).

13.4 Technical Data

Channel	2 *CANFD / 2 *FlexRay
PC Interface	USB 2.0
CAN/FlexRay Interface	DB9
Driver	Driverless design for Windows and Linux systems, offering excellent system compatibility
FlexRay	FlexRay channel（A and B）
Cold Start	Supported
Cache	Hardware cache, with each channel's transmission buffer supporting up to 1000 CAN frames
CAN	Supports CAN 2.0 A and B protocols, compliant with the ISO 11898-1 standard, with baud rates from 125Kbps to 1Mbps
CANFD	Supports CAN FD that complies with both ISO and non-ISO standards, with baud rates from 125Kbps to 8Mbps
Timestamp Accuracy	1 us, hardware message timestamp, can meet advanced requirements
CAN Terminal	Built-in 120-ohm terminal resistor, with the resistance value configurable

Resistor	through software
FlexRay Terminal Resistor	Built-in 100-ohm terminal resistor, with the resistance value configurable through software
Messages Sent per Second*	Up to 20,000 frames per second
Messages Received per Second*	Up to 20,000 frames per second
Insulate	CAN/FlexRay channel DC 2500V isolation, with an electrostatic discharge level of ±4KV for contact discharge and ±8KV for air discharge
Power Supply	USB power supply
Power Consumption	3W
Case Material	Metal
Dimension	Approx. 108*88*35mm
Weight	Approx. 262g (without packaging)/Approx. 779g (with packaging)
Operating Temperature	-40℃～75℃
Operating Humidity	10% ～ 90% (non-condensing)
Operating Environment	Keep away from corrosive gases

*Single channel 1Mbps, with a 0-byte data field.

13.5 Electrical Data

Parameter		Test Condition	Minimum Value	Typical Value	Maximum Value	Unit
Operating Voltage	USB power supply	CAN transmission/FlexRay transmission	4.8	5.0	5.2	V
Operating Current	USB power supply	CAN transmission/Flex	--	0.5	--	A

		Ray transmission				
Power Consumption	USB power supply	CAN transmission/FlexRay transmission	--	2.5	--	W
CAN Interface	Bus pin voltage resistance	CANH、CAHL	-58	--	58	V
	Terminal resistor	Terminal resistor enabled	--	120	--	Ω
	Insulate voltage resistance	Leakage current less than 1mA	2500	--	--	VDC
FlexRay Interface	Bus pin voltage resistance	FlexRay_BM、FlexRay_BP	-60	--	60	V
	Terminal resistor	Terminal resistor enabled	--	100	--	Ω
	Insulate voltage resistance	Leakage current less than 1mA	2500	--	--	VDC
EMC Compatibility	ESD	IEC61000-4-2 standard	Contact discharge: 4 Air discharge: 8	--	--	kV
	EFT	IEC61000-4-4 standard	2	--	--	kV

13.6 Mechanical Data

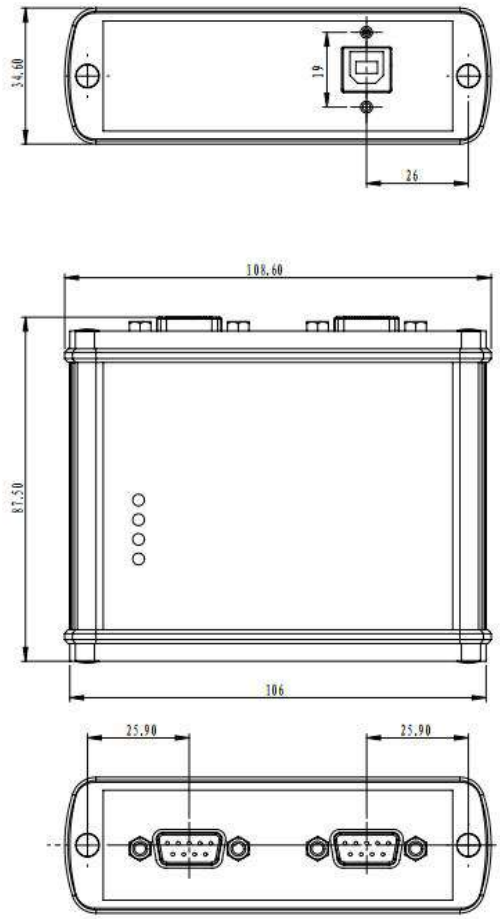

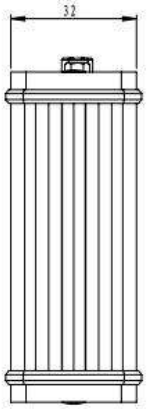

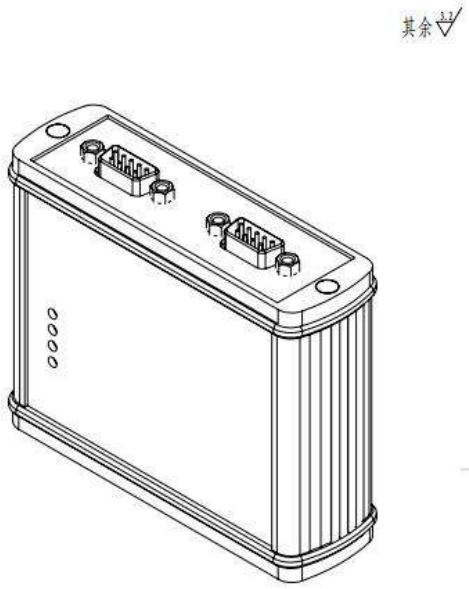

材质 Material		一般公差 General Tolerances IT12	表面处理 Surface Treatment	工艺tech.
A3		设计draw.	审核audi.	批准appr.
SCALE:1:1	SHEET 1 OF 1			
TOSUN				重量(g) Weight
上海同星智能科技有限公司 SHANGHAI TONGXING INTELLIGENT TECHNOLOGY CO.,LTD		TC1034尺寸图		版本 Rev. 00

13.7 Scope of Delivery

✓ Main device: TC1034

✓ USB cable

✓ DB9 female to dual male signal cable (CAN)

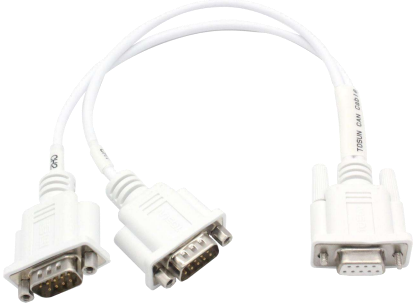

✓ DB9 female to dual male signal cable (FlexRay)

13.8 Hardware Interface

- USB 2.0 interface;
- DB9 male:

DB9 Pin	Channel	PIN Number	Definition	Channel	PIN Number	Definition
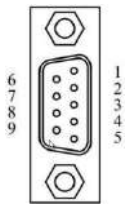	Flexray 1/2	PIN1	Flexray_BM2	CANFD 1/2	PIN2	CANFD1_Low
		PIN2	Flexray_BM1		PIN3	CANFD_GND
		PIN3	Flexray_GND		PIN4	CANFD2_Low
		PIN4	Flexray_BM3		PIN5	CANFD_Shield
		PIN5	Flexray_BM4		PIN7	CANFD1_High
		PIN6	Flexray_BP2		PIN8	CANFD2_High
		PIN7	Flexray_BP1			
		PIN8	Flexray_BP3			
		PIN9	Flexray_BP4			

13.9 LED

Diagram of LED indicator:

Description of indicator:

Indicator	**Definition**
CANFD 1	Indicator for CANFD channel 1
CANFD 2	Indicator for CANFD channel 2
Flexray1	Indicator for Flexray channel 1
Flexray2	Indicator for Flexray channel 2
LINK	Indicator for hardware connection

Description of LED color:

Color	**Description**
LINK Green	The device is connected
FlexRay: Green	Flexray channel data frame is sent or received correctly
FlexRay: Red	Flexray channel sends or receives error frames, indicating a configuration, protocol, or wiring error

CANFD Green	CANFD channel data frame is sent or received correctly
CANFD Red	CANFD channel sends or receives error frames, indicating a configuration, protocol, or wiring error

Note: The blinking frequency depends on the bus load.

13.10 Optional Accessories

1.TCA00011 (CAN surge protection device)

14.TC1113B

14.1 Overview

TC1113B is a two-channel CANFD bus interface device launched by TOSUN Technology. The CANFD bus rate supports up to 8M bps. The product connects to the PC via a USB 2.0 interface and to the vehicle end via an OBD port. It supports WiFi functionality and features a driverless design for Windows and Linux systems, ensuring excellent system compatibility.

With the powerful TSMaster software, it supports loading DBC and ARXML database files, making it very convenient to monitor, analyze, and simulate CAN FD bus data, and it also supports functions such as UDS diagnostics, ECU flashing, etc. The WiFi mode is recommended for packet monitoring and diagnostics, but not recommended for simulation.

The secondary development APIs for Windows and Linux can support various development environments such as C++, C#, LabView, Python, etc., making it highly efficient and easy to use, and is convenient to integrate into various testing systems.

14.2 Features

- ✓ us (microsecond) level hardware message timestamps to meet advanced requirements;
- ✓ USB 2.0 interface, with a driverless design for Windows and Linux systems, offering excellent system compatibility;
- ✓ CAN channel DC 2500V isolation;
- ✓ Automotive-grade design, supporting dbc files, a2l files, blf files, asc files, and arxml files;
- ✓ CAN channel baud rate adjustable from 125Kbps to 1Mbps, and CANFD supports a maximum of 8Mbps;
- ✓ Supports blf and asc format data recording and offline/online playback;
- ✓ Supports UDS diagnostics and CCP/XCP calibration;
- ✓ Supports UDS based Bootloader flashing;
- ✓ Supports information security testing;
- ✓ Supports secondary development interfaces for Windows and Linux systems;
- ✓ Built-in 120-ohm terminal resistor, with the resistance value configurable through software;
- ✓ WiFi support.

14.3 Technical Data

Channel	2 *CANFD
PC Interface	USB 2.0/WiFi
CAN Interface	OBD
Driver	Driverless design for Windows and Linux systems, offering excellent system compatibility
Cache	Hardware cache to ensure no frame loss
CAN	Supports CAN 2.0 A and B protocols, compliant with the ISO 11898-1 standard, with baud rates from 125Kbps to 1Mbps
CANFD	Supports CAN FD that complies with both ISO and non-ISO standards, with baud rates from 125Kbps to 8Mbps
Timestamp Accuracy	1 us, hardware message timestamp, can meet advanced requirements
Terminal Resistor	Built-in 120-ohm terminal resistor, with the resistance value configurable through software
Messages Sent per Second*	Up to 20,000 frames per second (USB mode)
Messages Received per Second*	Up to 20,000 frames per second (USB mode)
Insulate	CAN channel DC 2500V isolation

Power Supply	USB power supply or DC power supply (9-32V)
Power Consumption	3W
Case Material	Plastic
Dimension	Approx. 106*49*26mm
Weight	Approx. 77g (without packaging)/Approx. 295g (without packaging)
Operating Temperature	-40℃～80℃
Operating Humidity	10% ～ 90% (non-condensing)
Operating Environment	Keep away from corrosive gases

*Single channel 1Mbps, with a 0-byte data field.

14.4 Electrical Data

Parameter		Test Condition	Minimum Value	Typical Value	Maximum Value	Unit
Operating Voltage	USB power supply	CAN transmission	4.8	5.0	5.2	V
	External DC power supply	CAN transmission	9	12.0	32	V
Operating Current	USB power supply	CAN transmission	--	0.26	--	A
	External DC power supply	CAN transmission	--	0.21	--	A
Power Consumption	USB/DC total	CAN transmission	--	1.3/2.5	--	W
CAN Interface	Bus pin voltage resistance	CANH、CAHL	-58	--	58	V
	Terminal resistor	Terminal resistor enabled	--	120	--	Ω
	Insulate voltage resistance	Leakage current less than 1mA	2500	--	--	VDC

14.5 Mechanical Data

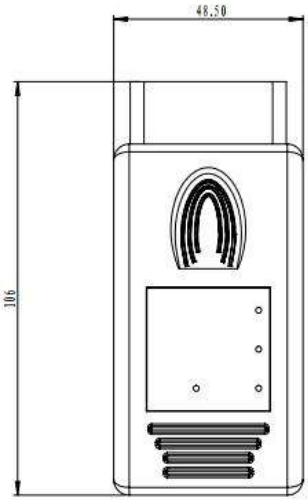

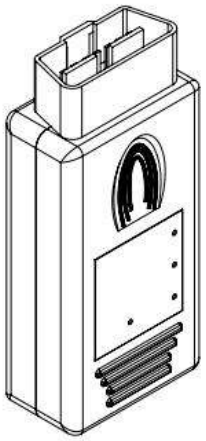

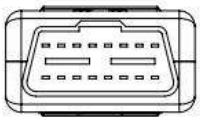

材质 Material		一般公差 General Tolerances IT12	表面处理 Surface Treatment	工艺tech.
A3		设计draw.	审核audi.	批准appr.
SCALE1:1	SHEET 1 OF 1			
TOSUN				重量(g) Weight
上海同星智能科技有限公司 SHANGHAI TONGXING INTELLIGENT TECHNOLOGY CO.,LTD		TC1113B 尺寸图		版本 Rev. 00

14.6 Scope of Delivery

✓ Main device: TC1113B

✓ USB cable

14.7 Hardware Interface

- USB 2.0 interface;
- OBD interface:

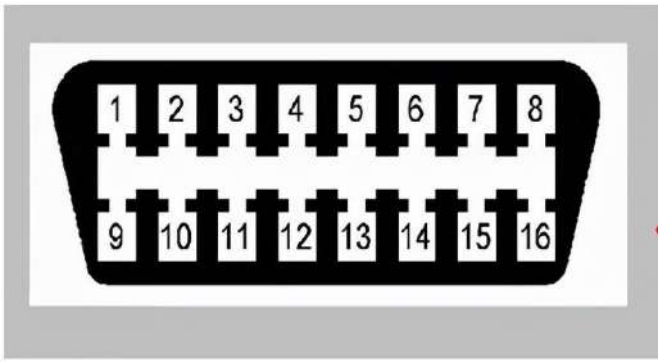

OBD PIN definition:

Channel	PIN Number	Definition	Channel	PIN Number	Definition
CANFD1	PIN6	CANFD1_High	CANFD 2	PIN2	CANFD2_High
	PIN14	CANFD1_Low		PIN10	CANFD2_Low
Power Supply	PIN16	VBat	Power Supply	PIN4	CANFD_GND

14.8 LED

Diagram of LED indicator:

Description of indicator:

Indicator	**Definition**
CANFD 1	Indicator for CANFD channel 1
CANFD 2	Indicator for CANFD channel 2
WiFi	Indicator for WiFi
Power	Indicator for power supply

Description of LED color:

Color	**Description**
Power Green	The device is connected
WiFi Green	WiFi function is normal
CANFD Green	CANFD channel data frame is sent or received correctly
CANFD Red	CANFD channel sends or receives error frames, indicating a configuration, protocol, or wiring error

Note: The blinking frequency depends on the bus load.

14.9 Optional Accessories

1.TCA00011 (CAN surge protection device)

15.TC1114B

15.1 Overview

TC1114B is a four-channel CANFD bus interface device launched by TOSUN Technology. The CANFD bus rate supports up to 8M bps. The product connects to the PC via a USB 2.0 interface and to the vehicle end via an OBD port. It supports WiFi functionality and features a driverless design for Windows and Linux systems, ensuring excellent system compatibility.

With the powerful TSMaster software, it supports loading DBC and ARXML database files, making it very convenient to monitor, analyze, and simulate CAN FD bus data, and it also supports functions such as UDS diagnostics, ECU flashing, etc. The WiFi mode is recommended for packet monitoring and diagnostics, but not recommended for simulation.

The secondary development APIs for Windows and Linux can support various development environments such as C++, C#, LabView, Python, etc., making it highly efficient and easy to use, and is convenient to integrate into various testing systems.

15.2 Features

- ✓ us (microsecond) level hardware message timestamps to meet advanced requirements;
- ✓ USB 2.0 interface, with a driverless design for Windows and Linux systems, offering excellent system compatibility;
- ✓ CAN channel DC 2500V isolation;
- ✓ Automotive-grade design, supporting dbc files, a2l files, blf files, asc files, and arxml files;
- ✓ CAN channel baud rate adjustable from 125Kbps to 1Mbps, and CANFD supports a maximum of 8Mbps;
- ✓ Supports blf and asc format data recording and offline/online playback;
- ✓ Supports UDS diagnostics and CCP/XCP calibration;
- ✓ Supports UDS based Bootloader flashing;
- ✓ Supports information security testing;
- ✓ Supports secondary development interfaces for Windows and Linux systems;
- ✓ Built-in 120-ohm terminal resistor, with the resistance value configurable through software;
- ✓ WiFi support.

15.3 Technical Data

Channel	4 *CANFD
PC Interface	USB 2.0/WiFi
CAN Interface	OBD
Driver	Driverless design for Windows and Linux systems, offering excellent system compatibility
Cache	Hardware cache to ensure no frame loss
CAN	Supports CAN 2.0 A and B protocols, compliant with the ISO 11898-1 standard, with baud rates from 125Kbps to 1Mbps
CANFD	Supports CAN FD that complies with both ISO and non-ISO standards, with baud rates from 125Kbps to 8Mbps
Timestamp Accuracy	1 us, hardware message timestamp, can meet advanced requirements
Terminal Resistor	Built-in 120-ohm terminal resistor, with the resistance value configurable through software
Messages Sent per Second*	Up to 20,000 frames per second (USB mode)
Messages Received per	Up to 20,000 frames per second (USB mode)

Second*	
Insulate	CAN channel DC 2500V isolation
Power Supply	USB power supply or DC power supply (9-32V)
Power Consumption	3W
Case Material	Plastic
Dimension	Approx. 106*49*26mm
Weight	Approx. 77g (without packaging)/Approx. 295g (with packaging)
Operating Temperature	-40℃～80℃
Operating Humidity	10% ～ 90% (non-condensing)
Operating Environment	Keep away from corrosive gases

*Single channel 1Mbps, with a 0-byte data field.

15.4 Electrical Data

Parameter		Test Condition	Minimum Value	Typical Value	Maximum Value	Unit
Operating Voltage	USB power supply	CAN transmission	4.8	5.0	5.2	V
	External DC power supply	CAN transmission	9	12.0	32	V
Operating Current	USB power supply	CAN transmission	--	0.3	--	A
	External DC power supply	CAN transmission	--	0.21	--	A
Power Consumption	USB/DC power supply	CAN transmission	--	1.5/2.5	--	W
CAN Interface	Bus pin voltage resistance	CANH、CAHL	-58	--	58	V
	Terminal resistor	Terminal resistor enabled	--	120	--	Ω
	Insulate voltage resistance	Leakage current less than 1mA	2500	--	--	VDC

15.5 Mechanical Data

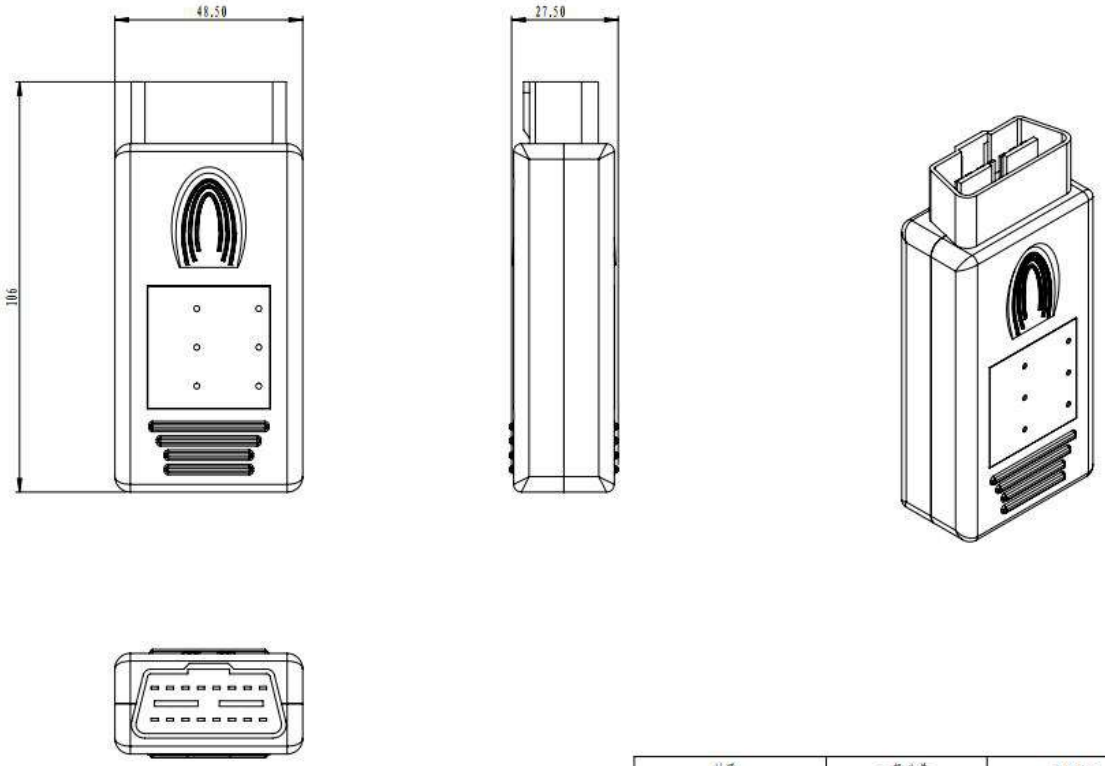

材质 Material		一般公差 General Tolerances IT12	表面处理 Surface Treatment	工艺tech.
A3		设计draw.	审核audi.	批准appr.
SCALE:1:1	SHEET 1 OF 1			
TOSUN				重量(g) Weight
上海同星智能科技有限公司 SHANGHAI TONGXING INTELLIGENT TECHNOLOGY CO.,LTD		TC1114B 尺寸图		版本 Rev. 00

15.6 Scope of Delivery

✓ Main device: TC1114B

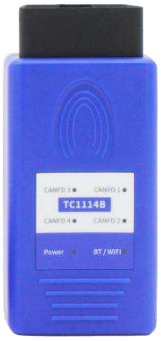

✓ USB cable

15.7 Hardware Interface

- USB 2.0 interface;
- OBD interface:

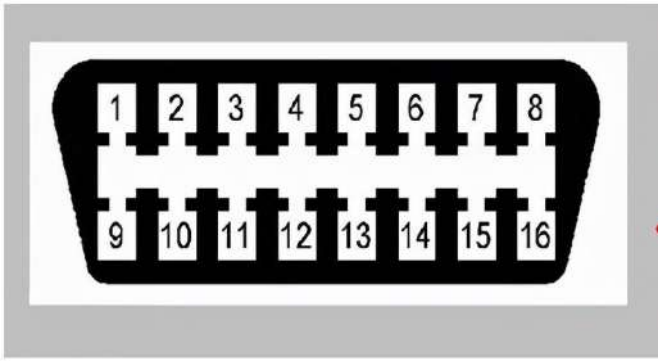

OBD PIN Definition:

Channel	PIN	Definition	Channel	PIN	PIN
CANFD 1	PIN6	CANFD1_High	CANFD 2	PIN2	CANFD2_High
	PIN14	CANFD1_Low		PIN10	CANFD2_Low
CANFD 3	PIN1	CANFD3_High	CANFD 4	PIN3	CANFD4_High
	PIN9	CANFD3_Low		PIN11	CANFD4_Low
Power	PIN16	VBat	Power	PIN4	CANFD_GND

Supply			Supply		

15.8 LED

Diagram of LED indicator:

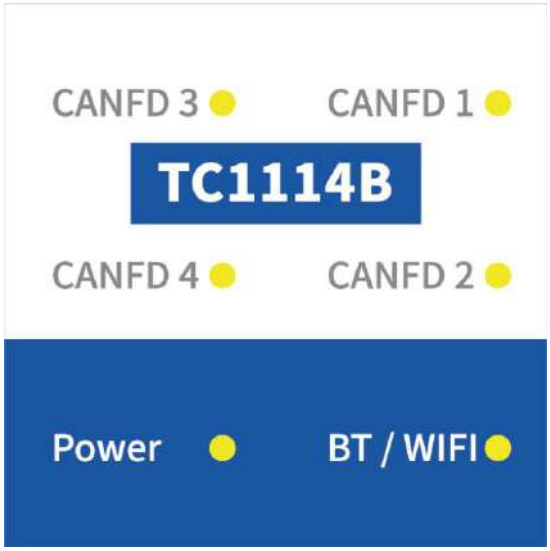

Description of indicator:

Indicator	**Definition**
CANFD 1	Indicator for CANFD channel 1
CANFD 2	Indicator for CANFD channel 2
CANFD 3	Indicator for CANFD channel 3
CANFD 4	Indicator for CANFD channel 4
WiFi	Indicator for WiFi
Power	Indicator for power supply

Description of LED color:

Color	**Description**
Power Green	The device is connected

WiFi Green	WiFi function is normal
CANFD Green	CANFD channel data frame is sent or received correctly
CANFD Red	CANFD channel sends or receives error frames, indicating a configuration, protocol, or wiring error

Note: The blinking frequency depends on the bus load.

15.9 Optional Accessories

1.TCA00011 (CAN surge protection device)

16.TC1034 Pro

Coming soon. Stay tuned for updates.

17.TC1018 Pro

Coming soon. Stay tuned for updates.

18.TC1054

Coming soon. Stay tuned for updates.

19.Time Synchronization Box

Coming soon. Stay tuned for updates.

20. Quick Start

20.1 System Connection

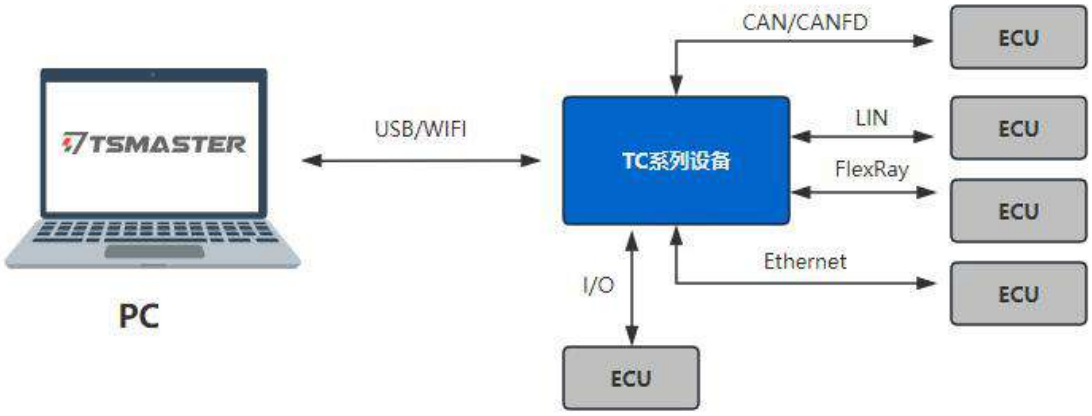

Connect the TC series devices to the computer via USB interface or WiFi, and connect the communication interface to the ECU. With the powerful TSMaster software on the PC side, user can control the device to communicate with the ECU using CAN/CANFD, LIN, FlexRay, Ethernet protocols, and perform I/O communication. The CAN/CANFD interface of the TC series devices comes with a software-configurable 120Ω terminal resistor, eliminating the need for additional terminal resistor installation.

20.2 Driver Installation

All TOSUN hardware adopts a driverless design, offering excellent system compatibility. The hardware allow for direct use on various operating systems (Windows 7/8/10/11, Linux) without the need to install drivers.

20.3 Software Overview

TSMaster is a powerful and comprehensive tool that can connect, configure, and control all TOSUN hardware tools and devices, enabling functions such as automotive bus embedded code generation, monitoring, simulation, development, UDS diagnostics, CCP/XCP calibration, ECU flashing, I/O control, test measurement, and so on.

TSMaster supports Matlab Simulink co-simulation and CarSim dynamic model ECU algorithm simulation testing (soft real-time HIL). It provides users with a series of convenient functions and editors, allowing them to directly execute ECU code within TSMaster and supports C script and Python script editing. At the same time, TSMaster also offers a mini-program function, enabling users to customize the simulation test panel, test process, test logic, and even the entire test system, and automatically generate reports. The code written by users based on TSMaster is hardware-independent, and can be easily shared, referenced, and used on different hardware platforms.

TSMaster supports multiple commonly used bus tool brands, including Vector, Kvaser, PEAK, IXXAT, as well as mainstream instruments in the market (such as oscilloscopes, waveform generators, and digital multimeters) and boards (such as AI, DI, DO, etc.). Its design concept is to perfectly integrate with the test system to achieve joint simulation and testing of multiple hardware and multiple channels. This enables TSMaster to meet the PV/DV test verification needs for various automotive electronic components and assemblies, as well as the inspection requirements for the production line.

20.4 Software Installation

TSMaster software download link:

http://download.tosun.tech/TOSUNSoftware/TSMaster_Setup_beta.7z

If the link is not accessible, you can contact the corresponding sales personnel or visit the official TOSUN website to obtain the software. Meanwhile, you can scan the QR code to follow the TOSUN official account to get the download link.

After the installation，you can see the following software on the PC.

20.5 Use TSMaster with the Hardware

In TSMaster, click Hardware-Channel Selection. In the channel selection GUI, select the device you want to connect.

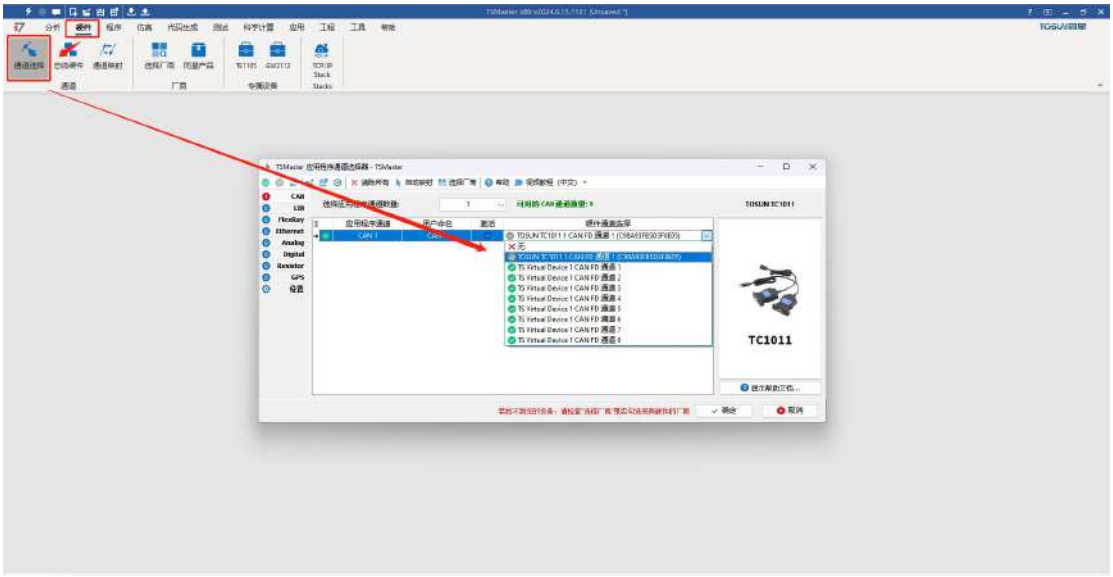

In Network Hardware, a series of controller parameters can be configured, such as protocol, baud rate, controller mode, and whether to enable the terminal resistor.

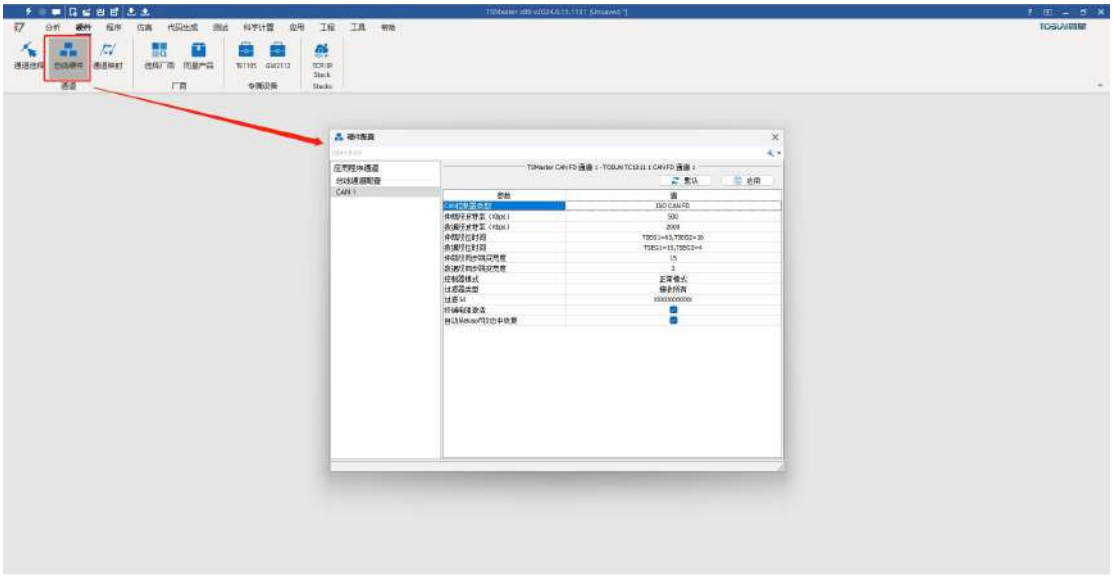

After the configuration, click Analysis->Start and connect the hardware to efficiently carry out works such as bus development, testing, ECU production line, etc. with the powerful TSMaster software. For more detailed instructions on using the TSMaster software, please refer to the TSMaster software manual and the quick start guide.

*TC1113B/TC1114B can connect to a PC via WiFi, the steps are as follows:

1. Before using the WiFi mode, you need to first connect the device to the PC via USB to configure the Settings parameters. In TSMaster Hardware->Channel Selection, click Settings and enable the “Enable TOSUN WIFI-OBD Device”.

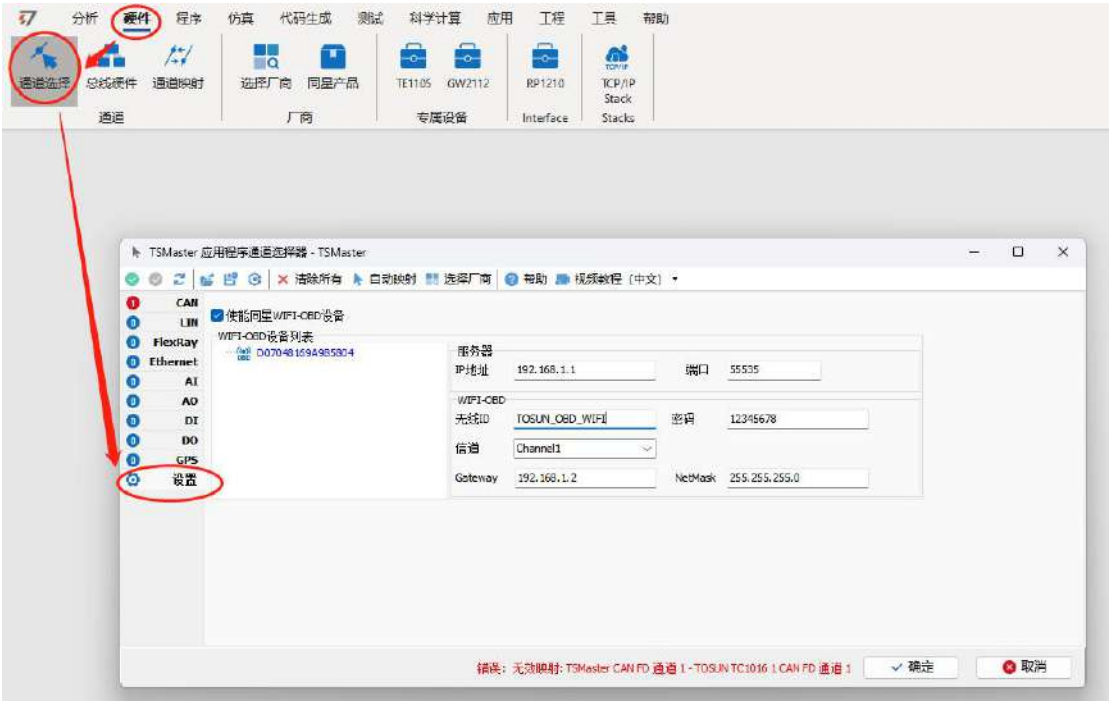

2. In the WiFi-OBD device list, select the device and then configure the wireless parameters. You can set the server IP address, server port, TC1114B device wireless SSID, password, channel, gateway, and subnet mask. (If there are too many devices on the same channel, interference may occur. In such cases, please try to change the channel to avoid overlapping with other WiFi signals.)

3. After the wireless parameters are configured, in the WiFi-OBD device list, select the device and right click, then click Download to download the wireless parameters into the device. After the download, right click again and click Active.

4. At this point, in the CAN channel interface, you can see the corresponding wireless channel in column “Hardware Channel Selection” .

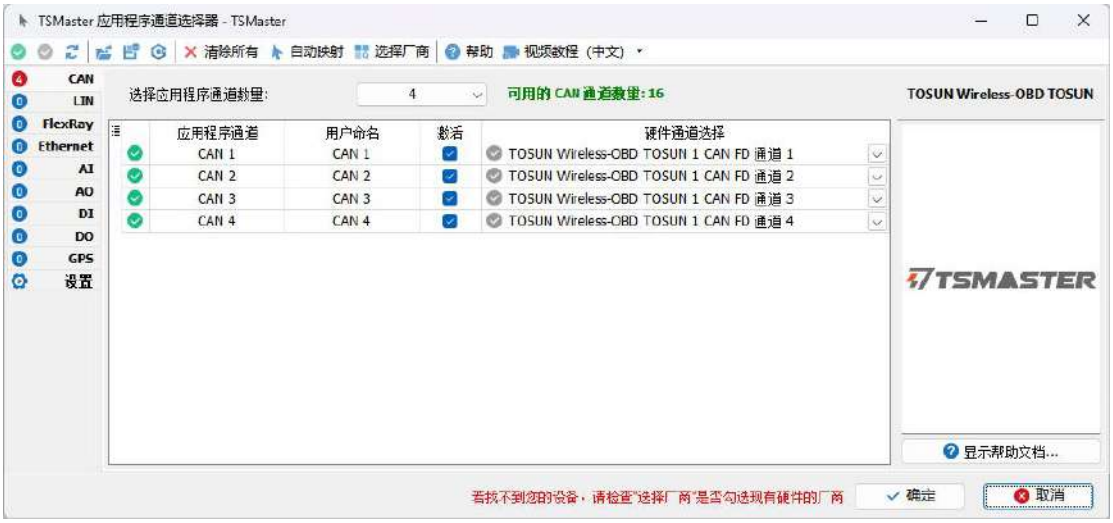

5. Disconnect the USB connection between the device and the PC, and power the device via the OBD interface (9~32V). After the device is powered on, connect the PC to the WiFi network broadcasted by the device.

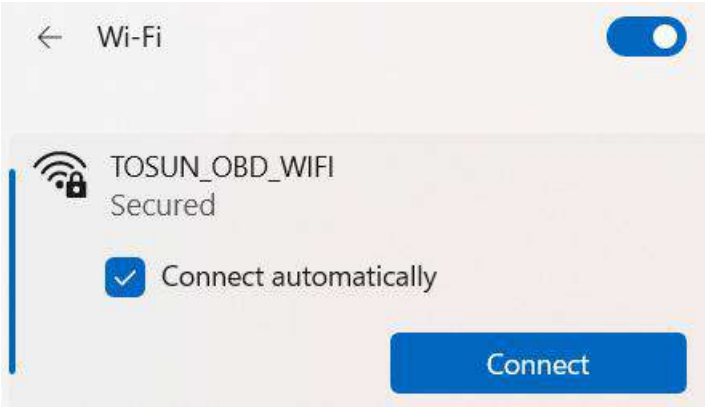

Once connected successfully, you will see a prompt in TSMaster as shown in the following figure. At this point, you can use the WiFi mode to connect to the device and perform the TSMaster functions. If after connecting to the device's WiFi, in TSMaster, you do not see a prompt

indicating a connection, and the application cannot connect, please try powering the device again.

Note: In some cases, the firewall settings on a PC can prevent the device from responding after connecting to the WiFi network, and can also cause TSMaster to fail in starting the program. In such cases, disable the firewall and try again.

21.Inspection and Maintenance

The main electrical components of TC series products are semiconductor components. Although the equipment have a long service life, they may also accelerate aging and significantly reduce their service life under an incorrect environment. Therefore, during the use of the equipment, periodic inspection should be carried out to ensure that the use environment maintains the required conditions.

It is recommended to conduct inspections at least once every 6 months to 1 year. Under improper environmental, more frequent inspections should be conducted. As shown in the table below, if you encounter problems during maintenance, please read the following content to find the possible causes of the problem. If the problem still cannot be solved, please contact Shanghai TOSUN Technology Ltd.

Item	Inspection	Standard	Action
Power Supply	Inspect for voltage fluctuations at the power supply end	USB port +5V DC Power supply port +12V DC	Use a USB power meter/voltage meter to check the power input end. Take necessary actions to keep the voltage fluctuations within the acceptable range.
Surrounding Environment	Check the ambient temperature of the	-40℃~+80℃	Use a thermometer to check the temperature and ensure

	surrounding environment. (Including the internal temperature of enclosed environments)		that the ambient temperature within in the acceptable range.
	Check the ambient humidity. (Including the internal humidity of enclosed environments)	The relative humidity must be within the range of 10% to 90%	Use a hygrometer to check the humidity and ensure that the ambient humidity within the acceptable range.
	Check for the accumulation of dust, powder, salt, and metal shavings	No accumulation	Clean and protect the equipment.
	Check for any contact with water, oil, or chemical sprays on the equipment	No contact	Clean and protect the equipment if necessary.
	Check for the presence of corrosive or flammable gases in the equipment area	No presence	Inspect by the smell, or using a sensor.
	Check for levels of vibration and shock	Vibration and shock are within the acceptable range	Install padding or other shock-absorbing devices if necessary.
	Check for noise sources near the equipment	No significant noise source	Isolate the equipment from noise sources or protect the equipment.
Wiring Installation	Check the crimped connectors in the external wiring	Ensure enough space between the connectors	Visually inspect and adjust if necessary.
	Check for damage in the external wiring	No damage	Visually inspect and replace the wiring if necessary.

TOSUN

Engineer Everything !

Software

Support CAN(FD)/LIN/FlexRay/SOME/IP and DoIP

UDS diagnostics/ECU flashing/CCP/XCP calibration

Embedded code generation/Application builder

Encrypted release/Logging and bus replay

Graphical programming/Residual bus simulation

C and Python scripting

Bus monitoring/Transmiting/Automated testing

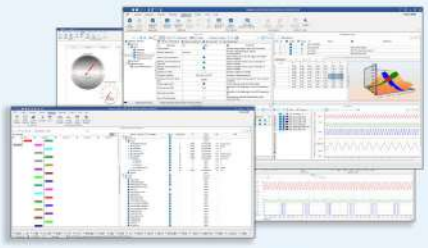

TSMASTER

Hardware

1/2/4/8/12-channel CAN FD/CAN to USB/PCIe device

1/2/6-channel LIN to USB/PCIe device

Multi channel FlexRay/CAN FD to USB/PCIe device

Multi channel automotive Ethernet/CAN FD to USB/PCIe device

Automotive Ethernet media conversion device (T1 to Tx)

Multi-channel CAN FD/Ethernet/LIN datalogger

TTS test systems

-CAN FD/CAN/FlexRay/LIN communication boards

-Relay and fault injection boards

-Resistors for sensor simulation

-Digital I/O, Analog I/O boards available

CAN CAN lin FlexRay OPEN ALLIANCE

Solutions

- Bus Conformance
- Network Automation Testing System
- Charging Testing System
- EMB Calibration Testing Equipment
- Information Security Solutions
- Steer-by-Wire Chassis Testing Solutions
- EOL Testing Equipment
- Motor Performance
- Durability Testing Solutions
- FCT

About TOSUN

The core product, TSMaster, is a comprehensive tool for automotive R&D, testing, production, and after-sales. It integrates essential functions with hardware support to streamline processes and ensure precision, making it ideal for automotive professionals.

International Organization

ASAM CiA

Quality Assurance

ISO9001:2015

CE Certification

CE

Contact Us :

+86 21-5956 0506

sales@tosunai.com

website :

www.tosunai.com

Beijing/Shanghai/Guangzhou/Chengdu/Changzhou/Taipei/Stuttgart/Seoul